GARMIN®

GTR™ 205x(R)
Installation Manual

190-02766-21 June 2026 Revision 3

© 2024 - 2026
Garmin International, Inc., or its subsidiaries
All Rights Reserved

Except as expressly provided herein, no part of this manual may be reproduced, copied, transmitted, disseminated, downloaded or stored in any storage medium, for any purpose without the express prior written consent of Garmin. Garmin hereby grants permission to download a single copy of this manual and of any revision to this manual onto a hard drive or other electronic storage medium to be viewed and to print one copy of this manual or of any revision hereto, provided that such electronic or printed copy of this manual or revision must contain the complete text of this copyright notice and provided further that any unauthorized commercial distribution of this manual or any revision hereto is strictly prohibited.

Garmin® and flyGarmin® are registered trademarks of Garmin International, Inc., or its subsidiaries. GTR™ is a trademark of Garmin International or its subsidiaries. These trademarks may not be used without the express permission of Garmin.

The Bluetooth® word mark and logos are registered trademarks owned by the Bluetooth SIG, Inc. and any use of such marks by Garmin is under license. Other trademarks and trade names are those of their respective owners.

For information regarding the Aviation Limited Warranty, refer to Garmin's website.

Refer to Garmin's website for aviation product support.

Revision Record

REVISION	REVISION DATE	CHANGE DESCRIPTION
1	06/27/24	Initial Release.
2	05/15/25	Added software v2.30 functionality.
3	06/08/26	Added software v2.31 functionality.

Current Revision Description

Listed changes are marked by change bars in the manual.

SECTION	DESCRIPTION
1.2.2	Updated "GTR 205xR" description of pilot-controlled COM radio channel spacing.
1.3	Updated table 1-2 "Physical Specifications" with depth dimensions.
4.4.2	Updated list of items of materials required but not supplied.
4.9	Updated table 4-11“Backshell Assembly” with note 1 and table note assignments.
5.1.2	Added a note below table 5-2 “GTR 205xR Pins” for signal name asterisk clarification.
5.2.6	Added “Speaker Output” section.
5.2.8	Updated “Configurable Discrete Inputs” to include signal name asterisk clarification.
5.2.8	Updated “Configurable Discrete Inputs” section to add “COM Remote Transfer (Lockout)” and “Hold for Lockout.”
6.4	Added information on configuring GTR 205xR with a compatible flight display.
6.4	Updated main software version to “2.31.”
6.4.2	Added a note for changing GTR 205xR Unit ID with a strapped switch.
6.4.2	Updated “ICS/Audio” introduction with information on external configuration.
6.4.2	Updated table 6-3 “Internal ICS/Audio Selections” to reflect “Internal ICS” setting for “ICS/Audio.”
6.4.2	Updated figure 6-9 “ICS/Audio Page with Audio Panel Enablement” to show “Internal ICS” setting.
6.4.2	Added figure 6-10 “ICS/Audio Page - External Audio” to show “External” setting.
6.4.2	Added “COM Squelch Functionality” and “COM Rx Squelch” information to “COM Levels.”
6.4.2	Added “COM Carrier Squelch” information to “COM Levels.”
6.4.3	Updated table 6-13 “RS-232 Page Selections” to include “Emulate GTR 225” selection.
6.4.3	Updated figure 6-19 to reflect “Emulate GTR 225” selection.
6.4.3	Updated table 6-15 “Discrete In Selections” with “COM Remote Transfer (Lockout) (GTR 205xR)” and “Hold for Lockout (GTR 205xR)” selections.
6.4.4	Added a note below figure 6-23 to indicate the SD card location for saved files.
10	Updated figure 10-2 “GTR 205xR Typical Installation” showing Unit ID strap switch and added note 1.
10	Updated figure 10-8 “GTR 205x/GTR 205xR EFIS Interconnect” with revised RS-232 pin labels.

INFORMATION SUBJECT TO EXPORT CONTROL LAWS

This document may contain information which is subject to the Export Administration Regulations (EAR) issued by the United States Department of Commerce (15 CFR, chapter VII, subchapter C) and which may not be exported, released, or disclosed to foreign nationals inside or outside of the United States without first obtaining an export license.

This information in this document is subject to change without notice. Visit Garmin's website (www.garmin.com) for updates and supplemental information regarding the operation of Garmin products.

WARNINGS, CAUTIONS, AND NOTES

WARNING
A WARNING MEANS INJURY OR DEATH IS POSSIBLE.

CAUTION
A CAUTION MEANS THAT DAMAGE TO THE EQUIPMENT IS POSSIBLE.

NOTE
A note provides additional information.

WARNING
THIS PRODUCT, ITS PACKAGING, AND ITS COMPONENTS CONTAIN CHEMICALS KNOWN TO THE STATE OF CALIFORNIA TO CAUSE CANCER, BIRTH DEFECTS, OR REPRODUCTIVE HARM. THIS NOTICE IS BEING PROVIDED IN ACCORDANCE WITH CALIFORNIA'S PROPOSITION 65. IF YOU HAVE ANY QUESTIONS OR WOULD LIKE ADDITIONAL INFORMATION, PLEASE REFER TO OUR WEBSITE AT WWW.GARMIN.COM/PROP65.

WARNING
PERCHLORATE MATERIAL – SPECIAL HANDLING MAY APPLY.
REFER TO WWW.DTSC.CA.GOV/PERCHLORATE.

CAUTION
TO AVOID DAMAGE TO THE UNIT, TAKE PRECAUTIONS TO PREVENT ELECTROSTATIC DISCHARGE (ESD) WHEN HANDLING UNIT, CONNECTORS, FAN, AND ASSOCIATED WIRING. ESD DAMAGE CAN BE PREVENTED BY TOUCHING AN OBJECT OF THE SAME ELECTRICAL POTENTIAL AS THE UNIT BEFORE HANDLING THE UNIT ITSELF.

CAUTION
THE GTR 205x HAS A DISPLAY IS COATED WITH A SPECIAL ANTI-REFLECTIVE COATING THAT IS SENSITIVE TO WAXES AND ABRASIVE CLEANERS. CLEANERS CONTAINING AMMONIA WILL HARM THE ANTI-REFLECTIVE COATING. IT IS IMPORTANT TO CLEAN THE DISPLAY USING A CLEAN, LINT-FREE CLOTH AND AN EYEGLASS LENS CLEANER THAT IS SPECIFIED AS SAFE FOR ANTI-REFLECTIVE COATINGS.

CAUTION
ALL SCREENSHOTS USED IN THIS DOCUMENT ARE CURRENT AT THE TIME OF PUBLICATION. SCREENSHOTS ARE INTENDED TO PROVIDE VISUAL REFERENCE ONLY. ALL INFORMATION DEPICTED IN SCREENSHOTS, INCLUDING SOFTWARE FILE NAMES, VERSIONS, AND PART NUMBERS, IS SUBJECT TO CHANGE AND MAY NOT BE UP TO DATE.

CAUTION

THE USE OF GROUND-BASED CELLULAR TELEPHONES WHILE AIRCRAFT ARE AIRBORNE IS PROHIBITED BY FCC RULES. DUE TO POTENTIAL INTERFERENCE WITH ONBOARD SYSTEMS, THE USE OF GROUND-BASED CELL PHONES WHILE THE AIRCRAFT IS ON THE GROUND IS SUBJECT TO FAA REGULATION 14 CFR §91.21. FCC REGULATION 47 CFR §22.925 PROHIBITS AIRBORNE OPERATION OF GROUND-BASED CELLULAR TELEPHONES INSTALLED IN OR CARRIED ABOARD AIRCRAFT. GROUND-BASED CELLULAR TELEPHONES MUST NOT BE OPERATED WHILE AIRCRAFT ARE OFF THE GROUND. WHEN ANY AIRCRAFT LEAVES THE GROUND, ALL GROUND-BASED CELLULAR TELEPHONES ON BOARD THAT AIRCRAFT MUST BE TURNED OFF. GROUND-BASED CELL PHONES THAT ARE ON, EVEN IN A MONITORING STATE, CAN DISRUPT GPS/SBAS PERFORMANCE.

NOTE

Garmin recommends installation of the GTR 205x/GTR 205xR by a Garmin authorized installer. To the extent allowable by law, Garmin will not be liable for damages resulting from improper or negligent installation. Refer to Garmin's website for aviation product support.

NOTE

System configuration settings must be verified for the specific build and installation following any software load or update.

Acronyms

A	
AFM	Aircraft Flight Manual
AGC	Automatic Gain Control
B	
BNC	Bayonet Neill-Concelman
C	
CAN	Controller Area Network
CDI	Course Deviation Indicator
CFR	Code of Federal Regulation
D	
DC	Direct Current
DF	Direction Finder
E	
EAB	Experimental Amateur-Built
EAR	Export Administration Regulations
EFIS	Electronic Flight Instrument System
ELT	Emergency Locator Transmitter
ETSO	European Technical Standard Order
F	
FAA	Federal Aviation Administration
FAR	Federal Aviation Regulation
G	
GDU	Garmin Display Unit
GNS	Garmin Navigation System
GPS	Global Positioning System
GS	Glideslope
GTN	Garmin Touchscreen Navigator
GTR	Garmin Transceiver Radio
H	
HSDB	High Speed Data Bus
I	
ICA	Instructions for Continued Airworthiness
ICAO	International Civil Aviation Organization
ICS	Intercom System
ILS	Instrument Landing System

L	
LCD	Liquid Crystal Display
LRU	Line Replaceable Unit
N	
NVIS	Night Vision Imaging System
P	
P/N	Part Number
S	
SBAS	Satellite-Based Augmentation System
SD	Secure Digital (Card)
SDI	Source Destination Identification
T	
TNC	Threaded Neill-Concelman
TSO	Technical Standard Order
V	
VSWR	Voltage Standing Wave Ratio

Revision Record ii
Current Revision Description iii
Acronyms vi
1 General Description 1-1
1.1 Introduction 1-1
1.2 Equipment Description 1-2
1.3 General Specifications 1-4
1.4 COM Specifications 1-5
1.5 Current Draw Specifications 1-6
1.6 License Requirements 1-7
1.7 FCC Grant of Equipment Authorization 1-7
1.8 GTR Database 1-7
2 Limitations 2-1
2.1 Installation 2-1
2.2 Aircraft Radio 2-1
3 Installation Overview 3-1
3.1 Introduction 3-1
3.2 Antenna Considerations 3-1
3.3 Mounting Considerations 3-2
3.4 Cabling and Wiring Considerations 3-3
3.5 Air Circulation and Cooling 3-3
3.6 Compass Safe Distance 3-3
4 Installation Procedures 4-1
4.1 Unit and Accessories 4-2
4.2 Miscellaneous Options 4-3
4.3 Reference Documents 4-3
4.4 Installation Materials Required but Not Supplied 4-4
4.5 Special Tools Required 4-5
4.6 Coaxial Cable Installation 4-6
4.7 Equipment Mounting 4-6
4.8 Antenna Installation and Connections 4-8
4.9 Electrical Installation Procedure 4-9
5 Connector Pinout Information 5-1
5.1 Pin Function List 5-2
5.2 Functional Descriptions 5-6
6 System Configuration 6-1
6.1 System Configuration Overview 6-3
6.2 Mounting, Wiring, and Power Checks 6-3
6.3 Connector Engagement Check 6-3
6.4 Configuration Mode Operations 6-4
6.5 Ground Checks (Configuration Mode) 6-27
6.6 Ground Checks (Normal Mode) 6-28
6.7 Flight Checks 6-30
6.8 Software Loading 6-31
6.9 Screenshots 6-32
7 Continued Airworthiness 7-1
8 Data Format 8-1
8.1 RS-232 Aviation Format 8-2
8.2 RS-232 NMEA Data Format 8-6
9 Mechanical Drawings 9-1
10 Interconnect Diagrams 10-1

Figure 4-1 Shielded Cable Preparation 4-11
Figure 4-2 Preferred Method of Shield Termination on Backshell Assembly 4-13
Figure 4-3 Connector and Backshell Assembly 4-15
Figure 4-4 Backshell Assembly (Potted Configuration Module) 4-16
Figure 5-1 GTR 205x Pins 5-2
Figure 5-2 GTR 205xR Pins 5-4
Figure 5-3 CAN Bus Pins....5-12
Figure 6-1 GTR 205x System Configuration Map 6-2
Figure 6-2 Controls in Configuration Mode 6-4
Figure 6-3 SYS Info Page....6-5
Figure 6-4 SW Upload Page 6-5
Figure 6-5 Tail Number Page....6-6
Figure 6-6 Enablement Page 6-6
Figure 6-7 Unit ID Page....6-7
Figure 6-8 Database Page 6-8
Figure 6-9 ICS/Audio Page with Audio Panel Enablement....6-9
Figure 6-10 ICS/Audio Page - External Audio 6-9
Figure 6-11 AUX Audio Input Configuration Page 6-10
Figure 6-12 Unit Lighting Page....6-11
Figure 6-13 Source/Level Configuration Page....6-11
Figure 6-14 Photocell Configuration Page....6-12
Figure 6-15 Lighting Bus Configuration Page....6-13
Figure 6-16 Reset to Defaults Page....6-13
Figure 6-17 COM Options Page....6-14
Figure 6-18 COM Levels Page....6-15
Figure 6-19 RS-232 Page 6-17
Figure 6-20 HSDB Settings Page....6-18
Figure 6-21 CAN Bus Settings Page 6-18
Figure 6-22 Discrete In Selections....6-19
Figure 6-23 SD Save Pages 6-20
Figure 6-24 Headset Test Page 6-21
Figure 6-25 Diagnostics Page 6-21
Figure 6-26 RS-232 Diagnostic Page....6-22
Figure 6-27 HSDB (Ethernet) Diagnostic Page 6-22
Figure 6-28 CAN Bus Diagnostic Page 6-22
Figure 6-29 Discrete In Page....6-23
Figure 6-30 Discrete Out Page....6-23
Figure 6-31 Analog In Pages 6-23
Figure 6-32 Power Stats Page....6-24
Figure 6-33 Temps Page....6-24
Figure 6-34 Clear/Delete Pages....6-25
Figure 6-35 Maintenance Log Warning 6-25
Figure 6-36 Clear Complete Prompt 6-25
Figure 6-37 Configuration Options Warning....6-25
Figure 6-38 Configuration Options Reset....6-26
Figure 6-39 Warning of Deleting Databases 6-26
Figure 6-40 Software Upload Page....6-31
Figure 6-41 Screenshots....6-32
Figure 9-1 GTR 205x Dimensions and Center of Gravity 9-2
Figure 9-2 GTR 205xR Dimensions and Center of Gravity 9-3
Figure 9-3 Rear Connector Layout Detail....9-4
Figure 9-4 Panel Cutout Detail 9-5
Figure 9-5 Mounting Rack Installation....9-6
Figure 9-6 Mounting Rack....9-7
Figure 10-1 GTR 205x Typical Installation 10-3

Figure 10-2 GTR 205xR Typical Installation 10-4
Figure 10-3 GTR 205x/205xR MIC Headsets Interconnect 10-5
Figure 10-4 GTR 205x Dual COM Interconnect 10-6
Figure 10-5 Power Lighting Configuration Interconnect 10-7
Figure 10-6 GTR 205x GPS Interconnect 10-8
Figure 10-7 Audio Panel Interconnect 10-10
Figure 10-8 GTR 205x/GTR 205xR EFIS Interconnect 10-11

Table 1-1 Models Available 1-2
Table 1-2 Physical Specifications 1-4
Table 1-3 Display Specifications (GTR 205x) 1-4
Table 1-4 COM Transmitter Specifications 1-5
Table 1-5 COM Receiver Specifications 1-6
Table 1-6 Current Draw Specifications 1-6
Table 1-7 FCC Grant of Equipment Authorization 1-7
Table 4-1 Catalog P/Ns 4-2
Table 4-2 Standard Kit Accessories 4-2
Table 4-3 Replaceable Parts 4-2
Table 4-4 Miscellaneous Options 4-3
Table 4-5 Federal Aviation Administration Documents 4-3
Table 4-6 Industry Standards 4-3
Table 4-7 Optional Reference Material 4-3
Table 4-8 Accessories Required but Not Supplied 4-4
Table 4-9 Recommended Crimp Tools (or Equivalent) 4-5
Table 4-10 Socket Contact P/Ns 4-5
Table 4-11 Backshell Assembly 4-9
Table 4-12 Configuration Module Kit 011-00979-03 4-16
Table 5-1 GTR 205x Pins 5-3
Table 5-2 GTR 205xR Pins 5-5
Table 5-3 Power and Ground Pins 5-6
Table 5-4 Lighting Pins 5-6
Table 5-5 Antenna Pins 5-6
Table 5-6 RS-232 Pins 5-7
Table 5-7 MIC Pins 5-8
Table 5-8 COM Audio Pins 5-8
Table 5-9 Speaker Output 5-9
Table 5-10 COM Discrete Inputs 5-9
Table 5-11 Configurable Discrete Input Pins 5-11
Table 5-12 Configuration Module 5-11
Table 5-13 AUX Pins 5-11
Table 5-14 CAN Bus Pins 5-12
Table 5-15 GTR/GNC Ethernet (HSDB) Pins 5-12
Table 5-16 Headset Output Pins 5-13
Table 5-17 Discrete Output Pins 5-13
Table 6-1 Unit ID Selections 6-7
Table 6-2 Database Selections 6-8
Table 6-3 Internal ICS/Audio Selections 6-9
Table 6-4 AUX Audio Input Selections 6-10
Table 6-5 Display and Keys Selections 6-11
Table 6-6 Photocell Selections 6-12
Table 6-7 Lighting Bus Configuration Selections 6-13
Table 6-8 Reset to Default Selections 6-13
Table 6-9 COM Options Selections 6-14
Table 6-10 COM Levels Selections 6-15
Table 6-11 COM RX Auto Squelch Settings 6-16
Table 6-12 COM Carrier Squelch Settings 6-16
Table 6-13 RS-232 Page Selections 6-17
Table 6-14 HSDB Setting Selections 6-18
Table 6-15 Discrete In Selections 6-19
Table 6-16 Diagnostics Selections 6-21
Table 6-17 Discrete Input Pins 6-28
Table 8-1 General Aviation Input Format 8-2
Table 8-2 Aviation Input Sentence Type 1 8-2

Table 8-3 Aviation Input Sentence Format 8-3
Table 8-4 Aviation Output Sentence Type 2 8-4
Table 8-5 Aviation Output Sentence Type 2 - No Route 8-4
Table 8-6 Type 2 Aviation Output Sentence Format 8-5
Table 8-7 Message Formats 8-6
Table 8-8 Message Definitions 8-7
Table 8-9 Frequency Type 8-7
Table 8-10 Message Format (GTR COM Requests) 8-9
Table 8-11 Active COM Frequency and Transceiver Message Format 8-10
Table 8-12 Standby COM Frequency and Transceiver Message Format 8-11
Table 8-13 COM Level and Audio Control Message Format 8-12
Table 8-14 Squelch Override Message Format 8-12
Table 8-15 Remote Airport Identifier Name Message Format 8-13
Table 8-16 Remote Airport Frequency Input Message Format 8-13
Table 8-17 Active COM Frequency with Identifier Message Format 8-14
Table 8-18 Standby COM Frequency with Identifier Message Format 8-15
Table 8-19 Set COM Frequency Lookup Table Entry Message Format 8-16
Table 8-20 Remove COM Frequency Lookup Table Entry Message Format 8-16
Table 8-21 COM Keypad Input Message Format 8-17
Table 8-22 COM Transceiver Status Message Format 8-18
Table 8-23 COM Volume Level Message Format 8-19
Table 8-24 COM Software Version Message Format 8-19
Table 8-25 GTR COM Message Format 8-20
Table 8-26 Unit Display Information Message Format 8-20
Table 8-27 GTR COM Error Message Format 8-21
Table 8-28 Input Message Summary 8-21
Table 8-29 Output Message Summary 8-22

1 General Description

1.1 Introduction 1-1
1.2 Equipment Description 1-2
1.2.1 GTR 205x 1-2
1.2.2 GTR 205xR 1-3
1.3 General Specifications 1-4
1.4 COM Specifications 1-5
1.5 Current Draw Specifications 1-6
1.6 License Requirements 1-7
1.7 FCC Grant of Equipment Authorization 1-7
1.8 GTR Database 1-7

1.1 Introduction

This manual is intended to provide mechanical and electrical information for use in the planning and design of an installation of the GTR 205x/GTR 205xR into an aircraft. It is not a substitute for an approved airframe-specific maintenance manual, installation design drawing, or complete installation data package. Attempting to install equipment by reference to this manual alone and without first planning or designing an installation specific to your aircraft is not recommended.

1.2 Equipment Description

The GTR 205x is a 1.35" panel mounted COM product, while the GTR 205xR is a 1.35" remote mounted COM product. The GTR 205x features a high-resolution LCD display, dual encoder knob, and a microSD card slot. The GTR 205xR is a remote-mounted unit. Unless specified otherwise, GTR refers to the GTR 205x and GTR 205xR.

Table 1-1 Models Available

Model	P/N	TX Power (Watt) [1]	8.33 kHz Spacing	25 kHz Spacing	NVIS [2]	Audio Panel [3]
GTR 205x	011-06748-00	10	Yes	Yes	Yes	Yes
GTR 205xR	011-06749-00	10	Yes	Yes	No	No

[1] 16W requires software enablement card. Not available for GTR 205xR.

[2] NVIS requires software enablement card. Not available for GTR 205xR.

[3] Audio Panel requires software enablement card. Not available for GTR 205xR.

1.2.1 GTR 205x

The GTR 205x has a COM transceiver with 10W COM transmit power. A software enablement is available to allow for NVIS and 16W COM transmit power. The COM radio has pilot-controlled options of 8.33 kHz or 25 kHz channel spacing. Built-in Bluetooth® wireless technology allows pairing up to eight Bluetooth-enabled devices. Only one active device connection is permitted at a time. With the audio panel feature enablement, the GTR 205x adds Dual-COM switching, COM playback, and 4-place intercom.

Features

- HSDB interfaces
- RS-232 interfaces
- Reverse frequency lookup
- CAN interfaces
- 2-place intercom
- 4-place intercom [1]
- Bluetooth media controls
- Bluetooth phone controls
- Dual-COM switching [1]
- COM Playback [1]
- Fail-safe audio

[1] Available with purchase of the Audio Panel enablement.

1.2.2 GTR 205xR

NOTE
GTR 205xR units do not support software enablements.

The GTR 205xR has a COM transceiver with 10W COM transmit power. The COM radio has pilot-controlled options of 8.33 kHz or 25 kHz channel spacing.

Features

- HSDB interfaces
- RS-232 interfaces
- CAN interfaces
- 2-place intercom
- Fail-safe audio

1.3 General Specifications

Table 1-2 Physical Specifications

Characteristics	Specifications
Bezel height	1.35" (34.29 mm)
Bezel width	6.25" (158.8 mm)
Rack height (dimple-to-dimple)	1.375" (34.93 mm)
Rack width	6.30" (160 mm)
GTR 205x: Depth behind panel with connectors (measured from face of aircraft panel to rear of connector backshells)	10.51" (266.95 mm)
GTR 205xR: Depth behind panel with connectors (measured from face of aircraft panel to rear of connector backshells)	10.32" (262.1 mm)
GTR 205x weight (unit only)	2.2 lbs. (1.0 kg)
GTR 205x installed with rack and connectors	2.8 lbs. (1.4 kg)
GTR 205xR weight (unit only)	2.0 lbs. (0.9 kg)
GTR 205xR installed with rack and connectors	2.6 lbs. (1.2 kg)
Operating temperature range	-20°C to +55°C
Humidity	95% non-condensing
Altitude range	-1,500 ft to 55,000 ft
Input voltage range (main connector)	9 to 33 VDC
Current draw	Refer to table 1-6.

Table 1-3 Display Specifications (GTR 205x)

Characteristics	Specifications
Display size	3.2" diagonal
Active area	Width: 3.06" (77.76 mm) Height: 0.79" (20.0 mm)
Resolution	480 x 124 pixels
Viewing angles (Direction of pilot's viewing angle)	Left: 45° Right: 45° From Top: 30° From Bottom: 10°

1.4 COM Specifications

The GTR 205x/GTR 205xR transmitter meets the requirements of RTCA DO-186B section 2.3 for a class 4 transmitter.

Table 1-4 COM Transmitter Specifications

Characteristics	Specifications
Microphone input	Two inputs, standard carbon or dynamic mic with integrated preamp providing minimum 70 mVRMS into 600 Ω load.
Modulation capability	Nominal 90% with 40 to 1500 mVRMS microphone input at 1000 Hz
Modulation	AM double sided Emission designator: 6K00A3E (118 - 136.975 MHz) 5K60A3E (118 - 136.992 MHz)
Frequency range	118.000 to 136.975 MHz, 25 kHz channel spacing 118.000 to 136.992 MHz, 8.33 kHz channel spacing
Frequency tolerance	±2 ppm from -20°C to +55°C
Output power	10 watt mode: 10 watts minimum 16 watt mode: 16 watts minimum
Duty cycle	10 W: 100% 16 W: Recommended 25% (5 seconds on/15 seconds off, 15 seconds on/45 seconds off, etc.)
Carrier noise level	At least 35 dB (SNR)
Stuck mic time-out	30 seconds time-out, reverts to receive
Demodulated audio distortion	Less than 5% distortion when the transmitter is at 90% modulation at 350 to 2500 Hz.

The GTR 205x/GTR 205xR receiver meets the requirements of RTCA DO-186B section 2.2 for a class C receiver.

Table 1-5 COM Receiver Specifications

Characteristics	Specifications
Frequency range	118.000 to 136.975 MHz, 25 kHz channel spacing 118.000 to 136.992 MHz, 8.33 kHz channel spacing
Headset audio output	Up to 65 mW into a 500 Ω load.
Speaker audio output	Up to 12 W into a 4 Ω load.
Audio response	Less than 6 dB of variation between 350 Hz and 2500 Hz.
Audio distortion	Less than 12% at rated output power.
AGC characteristics	Less than 3 dB of variation in the audio output from -93 to -13 dBm (power absorbed by a 50 Ω load).
Sensitivity	SINAD on all channels is greater than 6 dB when the RF level is -107 dBm (power absorbed by a 50 Ω load) modulated 30% at 1000 Hz at rated audio output power.
Squelch	Automatic squelch with manual override.
Selectivity	6 dB BW is greater than ±8 kHz for 25 kHz channeling. 60 dB BW is less than ±25 kHz for 25 kHz channeling. 6 dB BW is greater than ±2.78 kHz for 8.33 kHz channeling. 60 dB BW is less than ±7.37 kHz for 8.33 kHz channeling.

1.5 Current Draw Specifications

Table 1-6 Current Draw Specifications

LRU	TX Power Level	14 Volt Current Draw		28 Volt Current Draw	
		Typical [1]	Maximum	Typical [1]	Maximum
GTR 205x	10 W	0.84 A	3.62 A	0.44 A	1.73 A
	16 W		4.98 A		2.20 A
GTR 205xR [2]	10 W	0.63 A	3.35 A	0.33 A	1.61 A

[1] The specified current draw is with the display backlight set to 100%.

[2] There is no support for 16 W functionality.

1.6 License Requirements

CAUTION

THE VHF TRANSMITTER IN THIS EQUIPMENT IS GUARANTEED TO MEET FCC ACCEPTANCE OVER THE OPERATING TEMPERATURE RANGE. MODIFICATIONS NOT EXPRESSLY APPROVED BY GARMIN COULD INVALIDATE THE LICENSE AND MAKE IT UNLAWFUL TO OPERATE THE EQUIPMENT.

The Telecommunications Act of 1996, effective February 8, 1996, provides the FCC discretion to eliminate radio station license requirements for aircraft and ships. Unit installations must obey current transmitter licensing requirements.

In the US, visit the FCC website https://www.fcc.gov/wireless/bureau-divisions/mobility-division/aviation-radio-services to find out the specific details on whether a particular installation is exempt from licensing.

If an aircraft license is necessary, apply for a license using FCC Form 605, *Quick-Form Application for Authorization in the Ship, Aircraft, Amateur, Restricted and Commercial Operator, and General Mobile Radio Services*. The FCC also has a fax-on-demand service to supply forms by fax. If outside of the US, contact the responsible telecommunication authority. The owner of the GTR accepts all responsibility for obtaining the proper licensing before using the transceiver. The maximum transmitting power, modulation identification, and frequency band information may be required for licensing and are detailed in table 1-4.

1.7 FCC Grant of Equipment Authorization

Table 1-7 FCC Grant of Equipment Authorization

Model	FCC ID	IC ID
GTR 205x	IPH-04074 CONTAINS FCC ID: 2ADHKBM83SM1	1312A-04074 CONTAINS IC: 20266-BM83SM1
GTR 205xR	IPH-04074	1312A-04074

1.8 GTR Database

GTR 205x has a database of frequencies for airports. Users update the frequency database by purchasing database subscription updates from Garmin or Jeppesen. The frequency database is stored internally and uses a micro-SD card to transfer the database into the unit. Refer to the applicable GTR pilot's guide or go to flyGarmin.com for more information and instructions. Contact Jeppesen at (866) 498-0213 or www.jeppesen.com.

Garmin requests that the flight crew report any observed discrepancies related to database information. These discrepancies can come in the form of an incorrect frequency, incorrectly identified airport, or other station, or any other displayed item used for communication in the air or on the ground. Go to flyGarmin.com to report database errors.

2 Limitations

2.1 Installation 2-1
2.2 Aircraft Radio 2-1

2.1 Installation

To mitigate against the loss of communication, installation of a second communication system may be required.

The unit must not be installed in areas where water or fluid contamination could be commonly encountered.

2.2 Aircraft Radio

An aircraft radio station license is not required when operating in U.S. airspace, but may be required when operating internationally.

3 Installation Overview

3.1 Introduction 3-1
3.2 Antenna Considerations 3-1
3.2.1 COM Antenna Location 3-1
3.2.2 Interference of GPS 3-2
3.3 Mounting Considerations 3-2
3.4 Cabling and Wiring Considerations 3-3
3.5 Air Circulation and Cooling 3-3
3.6 Compass Safe Distance 3-3

3.1 Introduction

Always follow acceptable avionics installation practices per AC 43.13-1B, AC 43.13-2B, or later FAA approved revisions of these documents. The communications installation instructions have been prepared to meet the guidance material defined by AC 20-67B, *Airborne VHF Communications Equipment Installations*.

3.2 Antenna Considerations

Considerations for the mounting location of the antennas required for the GTR are provided in this section. For mounting the COM antennas, refer to the aircraft manufacturer's data.

3.2.1 COM Antenna Location

NOTE

Canadian installations are required to meet Industry Canada specifications for maximum radiation as documented in Radio Specifications Standard 102 (RSS-102). For more information about RF exposure and related Canadian regulatory compliance, contact:

Manager, Radio Equipment Standards
Industry Canada
365 Laurier Avenue
Ottawa, Ontario
K1A 0C8

In accordance with Canadian Radio Specifications Standard 102 (RSS 102), RF field strength exposure to persons from an antenna connected to this device should be limited to 51 V/m for controlled environment and 22 V/m for uncontrolled environment.

NOTE

The COM transceiver antenna(s) of the device is (are) intended to be mounted along the fuselage of the aircraft and accessible only to aircraft maintenance personnel. To reduce RF exposure, avoid installation of antenna(s) in areas of the aircraft that provide crew or passengers direct exposure to antenna radiation. For installations that may provide direct exposure, the limits specified by FCC regulations 47 CFR 1.1310 should be referenced by the installer.

The COM antenna should be installed away from all projections, engines and propellers. The ground plane surface directly below the antenna should be a flat plane over as large an area as possible (18" square, minimum). The antenna should be mounted a minimum of six feet from any DME or other COM antennas, and four feet from any ADF sense antennas. The COM antenna should also be mounted as far apart as practical from the ELT antenna. Some ELTs have exhibited re-radiation problems that cause interference with other radios, including GPS. This can happen when the COM is transmitting on certain frequencies such as 121.15 or 121.175 MHz, that may cause the ELT output circuit to oscillate from the signal coming in on the ELT antenna coax.

If simultaneous use of two COM transceivers is desired (split-COM or simul-COM), the COM antennas should be spaced for maximum isolation. A configuration of one topside antenna and one bottom side antenna is recommended. In installations with minimal COM to COM antenna isolation, interference may be observed during split COM operations. Using the transmit interlock may be necessary in such installations to prevent interference during simultaneous operation.

3.2.2 Interference of GPS

On some installations, VHF COM transceivers, ELT antennas, and DF receiver antennas can re-radiate through the GPS antenna. Placement of the GPS antenna relative to a COM transceiver and COM antenna (including the unit COM antenna), ELT antenna, and DF receiver antenna is critical.

Use the following guidelines, in addition to others in this document, when locating the GTR and its antennas.

- Locate the unit as far as possible from all GPS antennas
- Locate the COM antenna as far as possible from all GPS antennas

If a COM antenna is found to be the problem, a 1.57542 GHz notch filter (refer to table 4-4) may be installed in the VHF COM coax, as close to the COM as possible. This filter is not required for the GTR transmitter.

If a COM is found to be radiating, the following can be done:

- Replace or clean VHF COM rack connector to ensure good coax ground
- Place a grounding brace between the GTR, VHF COM, and ground
- Shield the VHF COM wiring harness

3.3 Mounting Considerations

The unit is designed to mount in the avionics stack in the aircraft instrument panel within view and reach of the pilot. The primary unit location should minimize pilot head movement when transitioning between looking outside of the cockpit and viewing/operating the unit. The location should be such that the unit is not blocked by the glare shield on top, or by the throttles, control yoke, etc., on the bottom. If aircraft has a throw-over yoke, be sure the yoke does not interfere with the unit.

For remote mounting considerations, refer to Remote Mount section.

3.4 Cabling and Wiring Considerations

NOTE

Pigtail lengths should be less than 3.0". Wiring which is required to be shielded must be shielded per section 10.

Wiring should be installed in accordance with AC 43.13-1B Chapter 11. For dual unit installations, care should be taken to ensure separation between wires of redundant systems to reduce the possibility of loss of navigation due to a single event. When wire separation cannot be achieved, the following issues should be addressed:.

- It should not be possible for a cable harness to be exposed to wire chafing in a manner that both units fail simultaneously;
- The cable harness should not be located near flight control cables and controls, high voltage lines or fuel lines;
- The cable harness should be located in a protected area of the aircraft (e.g., isolated from engine rotor burst); and
- Do not route cable near high voltage sources.

Refer to section 4.4.2 and section 4.5 for connector and tooling information.

Refer to section 4.6 for recommended coax cable.

Refer to section 10 for the appropriate wiring connections to assemble the wiring connector.

Once the cable assemblies have been made, attach the cable connectors to the rear connector plate. After installing the mounting tube, attach the assembled connector plate. Route the wiring bundle as appropriate. Use 22 or 24 AWG wire for all connections. For power and ground, use the wire gauge specified in the interconnect drawing, then 22 AWG for the short length from the splice to the connector. Avoid sharp bends.

3.5 Air Circulation and Cooling

The unit meets all requirements without external cooling. However, as with all electronic equipment, lower operating temperatures extend equipment life.

Units packed tightly in the avionics stack heat each other through radiation, convection, and sometimes by direct conduction. Even a single unit operates at a much higher temperature in still air than in moving air.

3.6 Compass Safe Distance

After reconfiguring the avionics in the cockpit panel, if the unit is mounted less than 12" from the compass, recalibrate the compass and make the necessary changes for noting correction data.

4 Installation Procedures

4.1 Unit and Accessories 4-2
4.2 Miscellaneous Options 4-3
4.3 Reference Documents 4-3
4.4 Installation Materials Required but Not Supplied 4-4
4.4.1 Accessories Required but Not Supplied 4-4
4.4.2 Materials Required but Not Supplied (New Installations Only) 4-4
4.5 Special Tools Required 4-5
4.6 Coaxial Cable Installation 4-6
4.7 Equipment Mounting 4-6
4.7.1 Installation 4-6
4.8 Antenna Installation and Connections 4-8
4.8.1 COM Antenna 4-8
4.9 Electrical Installation Procedure 4-9
4.9.1 Configuration Module Assembly with Potted PCB (GTR 205x) 4-16

4.1 Unit and Accessories

For description of units refer to table 1-1.

Table 4-1 Catalog P/Ns

Model	Unit P/N	Unit Only Kit	Standard Kit
GTR 205x	011-06748-00	010-03395-00	010-03395-01
GTR 205xR	011-06749-00	010-03396-00	010-03396-01

Table 4-2 Standard Kit Accessories

Model	Item	P/N
GTR 205x/GTR 205xR	Configuration module kit	011-00979-03 [1]
	Connector kit	011-05779-10
	Backplate assembly	011-05691-00
	Mounting rack	115-03651-00 115-04497-00
	Product information kit (GTR 205x)	K00-01298-10
	Product information kit (GTR 205xR)	K00-01298-11

[1] Not applicable to GTR 205xR models.

Table 4-3 Replaceable Parts

Item	P/N
Knob replacement kit	K00-01439-00

4.2 Miscellaneous Options

Table 4-4 Miscellaneous Options

Item	Garmin P/N	Manufacturer P/N
GPS 1.57542 GHz notch filter	330-00067-00	N/A
Connector, TNC, male, clamp	N/A	031-4452 [1]

[1] This part is not available from Garmin.

Vendor Contact Information (provided for convenience only):

Amphenol RF, Four Old Newtown Road, Danbury, CT 06810 Phone: (800) 627-7100

4.3 Reference Documents

Table 4-5 Federal Aviation Administration Documents

DOCUMENT	P/N
Advisory Circular, Airworthiness Approval of Positioning and Navigation Systems	AC 20-138D
FAA Advisory Circular, Development Assurance for Airborne Electronic Hardware	AC 43.13-2A
FAA Advisory Circular, Acceptable Methods, Techniques, and Practices - Aircraft Inspection and Repair	AC 43.13-1B
FAA Advisory Circular, Development Assurance for Airborne Electronic Hardware	AC 20-152
FAA Advisory Circular, System Safety Analysis and Assessment for Part 23 Airplanes	AC 23.1309-1E
FAA Advisory Circular, System Safety Analysis and Assessment for Part 25 Airplanes	AC 25.1309-1A
FAA Advisory Circular, Certification of Normal Category Rotorcraft	AC 27-1B

Table 4-6 Industry Standards

DOCUMENT	P/N
Guidelines and Methods for Conducting the Safety Assessment Process on Civil Airborne Systems and Equipment	SAE ARP 4761
Design Assurance Guidance For Airborne Electronic Hardware	RTCA/DO-254
Software Considerations in Airborne Systems and Equipment Certification	RTCA/DO-178B

Table 4-7 Optional Reference Material

DOCUMENT	P/N
GTR 205x Pilot's Guide	190-02766-22

4.4 Installation Materials Required but Not Supplied

4.4.1 Accessories Required but Not Supplied

Table 4-8 Accessories Required but Not Supplied

Item	Requirements
COM antenna	• Meets TSO-C37( ) and -C38( ) or TSO-C169( ) • 50 Ω, vertically polarized with coaxial cable
Headphones	500 Ω nominal impedance
Microphone	Low impedance, carbon or dynamic, with transistorized pre-amp

4.4.2 Materials Required but Not Supplied (New Installations Only)

The GTR is intended for use with the standard aviation accessories. The following items are required for installation, but not supplied.

- Wire (MIL-W-22759/16 or equivalent)
- Shielded wire (MIL-C-27500 or equivalent)
- Hardware
    - #6-32 x 100° flat head SS screw (MS24693, AN507R or other approved fastener (6 ea.))
    - #6-32 self-locking nut (MS21042 or other approved fastener (6 ea.))
    - #8-32 x .312" screw, PHP, stainless or cadmium plated steel
    - #8 split washer, (.045" compressed thickness) stainless or cadmium plated steel
    - #8 .032" flat washer, thick, .174" ID, .375" OD, stainless or cadmium plated steel
- Push/pull (manually resettable) circuit breakers
- Tie wraps or lacing cord
- Ring terminals (for grounding)
- Coaxial cable (RG-400, RG-142B or equivalent. Refer to section 4.8 for additional information)
- Aircraft grade category 5 Ethernet cable (required only if HSDB interface is used)
- Shield terminator
- Silicone fusion tape

4.5 Special Tools Required

NOTE

Insertion/extraction tools from ITT Cannon are all plastic; others are plastic with metal tip.

Some of the connectors use crimp contacts. The table below identifies crimp tools required to ensure consistent, reliable crimp contact connections for the rear D-sub connectors.

Table 4-9 Recommended Crimp Tools (or Equivalent)

Manufacturer	Hand Crimping Tool	22 – 28 AWG (P1)	
		Positioner	Insertion/ Extraction Tool
Military P/N	M22520/2-01	M22520/2-09	M81969/14-01 M81969/1-04
Positronic	9507-0-0-0	9502-4-0-0	M81969/1-04
ITT Cannon	995-0001-584	995-0001-739	000849490 274-7048-000MIL
AMP	601966-1	601966-6	91067-1 2031838-1
Daniels	AFM8	K42	M81969/14-01 M81969/1-04
Astro	615717	615725	M81969/14-01 M81969/1-04

Table 4-10 Socket Contact P/Ns

Wire Gauge	P1
	22-28 AWG
Garmin P/N	336-00021-00
Military P/N	M39029/58-360 [1]

[1] Non-Garmin part numbers shown are not maintained by Garmin and are subject to change without notice.

4.6 Coaxial Cable Installation

Follow the steps below to install coaxial cables.

1. Route the coaxial cable to the radio rack location considering the recommendations listed in section 3.2.
2. Secure the cable in accordance with AC 43.13-1B chapter 11, section 11.
3. Trim the coaxial cable to the desired length.
4. Install the coaxial connectors per the manufacturer's instructions.

4.7 Equipment Mounting

CAUTION

THE APPLICATION OF HEX DRIVE TOOL TORQUE EXCEEDING 15 IN-LBS CAN DAMAGE THE LOCKING MECHANISM.

NOTE

Prior to placing the unit in the rack, in order to ensure correct position of the retention mechanism, it may be necessary to insert the hex drive tool into the access hole and turn the drive tool counterclockwise until it completely stops.

4.7.1 Installation

Panel Mount

Use the dimensions shown in figure 9-1 to prepare the mounting holes for the GTR The mounting rack may be used as a template for drilling the mounting holes.

1. Install the rack in a rectangular 6.32" x 1.40" hole (or gap between units) in the instrument panel. The lower-front lip of the rack should be flush with, or extend slightly beyond, the finished aircraft panel.

NOTE

Rack deformations will hinder unit installation and removal. The unit may not fully engage if the front lip of the mounting rack is behind the instrument panel, or if screw heads and other obstructions impede unit connectors (section 6.3). For mounting rack details refer to figure 9-6.

2. Install the rack in the aircraft panel using six #6-32 flat head screws and six self-locking nuts. The screws are inserted from the inside through the holes in the sides of the rack.
3. To attach the backplate to the rack, align the backplate so that the backplate screw heads pass through the keyed holes in the back of the rack.
4. Slide the backplate down (viewing from cockpit) until it sits into place.
5. Hold the backplate to prevent rotation and secure the backplate by tightening the four #4-40 screws.

Insertion

1. Slide the unit into the rack straight until it stops, approximately 3/8" short of the final position.
2. Insert a 3/32" hex drive tool into the access hole at the bottom of the unit face.
3. Turn the hex tool clockwise while pressing on the left side of the bezel until the unit is seated in the rack.

Removal

1. Insert the hex drive tool into the access hole on the unit face.
2. Turn hex drive tool counterclockwise until the hex drive tool stops.
3. Pull the unit from the rack.

Remote Mount

The GTR 205xR standard remote mount racks can be mounted in any orientation as long as six mounting screws are attached to a mounting bracket. Fabricate the mounting bracket(s) for the GTR 205xR unit with the dimension shown in figure 9-2.

Attach the connectors to the connector backplate the same way as panel mount units. Refer to Panel Mount section.

Unit Replacement

Whenever the unit is reinstalled, verify the unit powers up successfully.

4.8 Antenna Installation and Connections

4.8.1 COM Antenna

The GTR unit requires a standard 50 Ω vertically polarized antenna. Follow the antenna manufacturer's installation instructions for mounting the antenna.

The antenna should be mounted on a metal surface or a ground plane with a minimum area of 18" x 18". Refer to section 3.2.1 for installation location considerations.

The antenna coax cable should be made of RG-142B, RG-400 or a comparable quality 50 Ω coax.

Check for insertion loss and VSWR. VSWR should be checked with an in-line type VSWR/wattmeter inserted in the coaxial transmission line between the transceiver and the antenna. The VSWR meter should be inserted as close to the transceiver as possible. When rack and harness buildup is performed in the shop, the coax termination may be provisioned by using a 6" in-line BNC connection. This would be an acceptable place to insert the VSWR meter. Any problem with the antenna installation is most likely seen as high reflected power. A VSWR of 3:1 may result in up to a 50% loss in transmit power.

4.9 Electrical Installation Procedure

CAUTION

CHECK CONNECTIONS FOR ERRORS BEFORE INSERTING THE UNIT INTO THE RACK. INCORRECT WIRING COULD CAUSE COMPONENT DAMAGE.

The installation kit for the GTR includes connectors and crimp contacts.

Refer to:

- Table 4-9 for crimp tool
- Section 4.4.2 for the type of wire
- Section 5 for pinout information
- Section 10 for pin connections

Route the wire harness, avoiding sharp bends and providing adequate space.

The connector kit includes the backshell assembly. Table 4-11 lists part numbers for the D-sub connectors and the backshell assembly.

Table 4-11 Backshell Assembly

Figure	Item #	Description	Garmin P/N	Notes
4-3	1	Backshell (P1)	125-00568-10	[1]
4-3	2	Screw, 4-40 x .250, FLHP100°, SS/P, nylon	211-63234-08	[1]
4-3	3	Screw, 4-40 x .375,PHP,SS/P, with nylon	211-60234-10	[1]
4-3	4	Strain relief (P1)	115-00499-03	[1]
4-3	5	Cover (P1)	115-00500-03	[1]
4-3	6	Screw,4-40x.187, FLHP100,SS/P, w/nylon	211-63234-06	[1]
4-2	7	Connector, D-sub, HD, 62-pin (P1)	330-00366-62	[1]
4-2	8	Multiple conductor shielded cable	As Required	[2]
4-1 4-2	9	Shield terminator	As Required	[2] [3]
4-1 4-2	10	Wire, insulated (20-22 AWG), 3" max length	As Required	[2] [3]
4-2	11	Pin contacts, #22D	336-00021-00	[1]
4-2	12	Ring terminal, #8, insulated, 18-22 AWG, 14-16 AWG, 12-10 AWG	MS25036-149 MS25036-153 MS25036-156	[2] [4]
4-2	13	Screw, PHP, 8-32 x .312", stainless or cadmium plated steel	MS51957-42 MS35206-242	[2] [4]

Figure	Item #	Description	Garmin P/N	Notes
4-2	14	Split washer, #8, (.045" compressed thickness) stainless or cadmium plated steel	MS35338-137 MS35338-42	[2] [4]
4-2	15	Flat washer, #8, .032" thick, .174"ID, .375" OD, stainless or cadmium plated steel	NAS1149CN832RN AS1149FN832P	[2] [4]
4-2	16	Silicone fusion tape	249-00114-00	[2]

[1] Supplied as part of connector kit, P/N 011-05779-10.

[2] Not supplied - must be purchased separately.

[3] Solder sleeve with pre-installed shield drain wire may be used instead of items 9 and 10.

[4] Not a Garmin part number.

CAUTION

THE SCREWS (13) USED TO GROUND THE SHIELDS TO THE SHIELD BLOCK SHOULD PENETRATE TWO TO FOUR THREADS PAST THE SHIELD BLOCK. IF SCREWS ARE TOO LONG, THEY COULD POTENTIALLY DAMAGE THE WIRES GOING INTO THE BACKSHELL.

NOTE

It is preferred only two wires (10) be terminated per ring terminal, and only two ring terminals be installed on each shield block terminal location. Up to three shields or wires may be terminated within the MS25036-153 ring terminal (12). A maximum of three ring terminals may be installed on each shield block terminal location. Each tapped hole on the backshell can accommodate two ring terminals (12). Use ring terminal MS25036-153 for two wires. If only a single wire is left or needed for the connector, use MS25036-149 ring terminal.

Prepare all shielded cables as shown in figure 4-1.

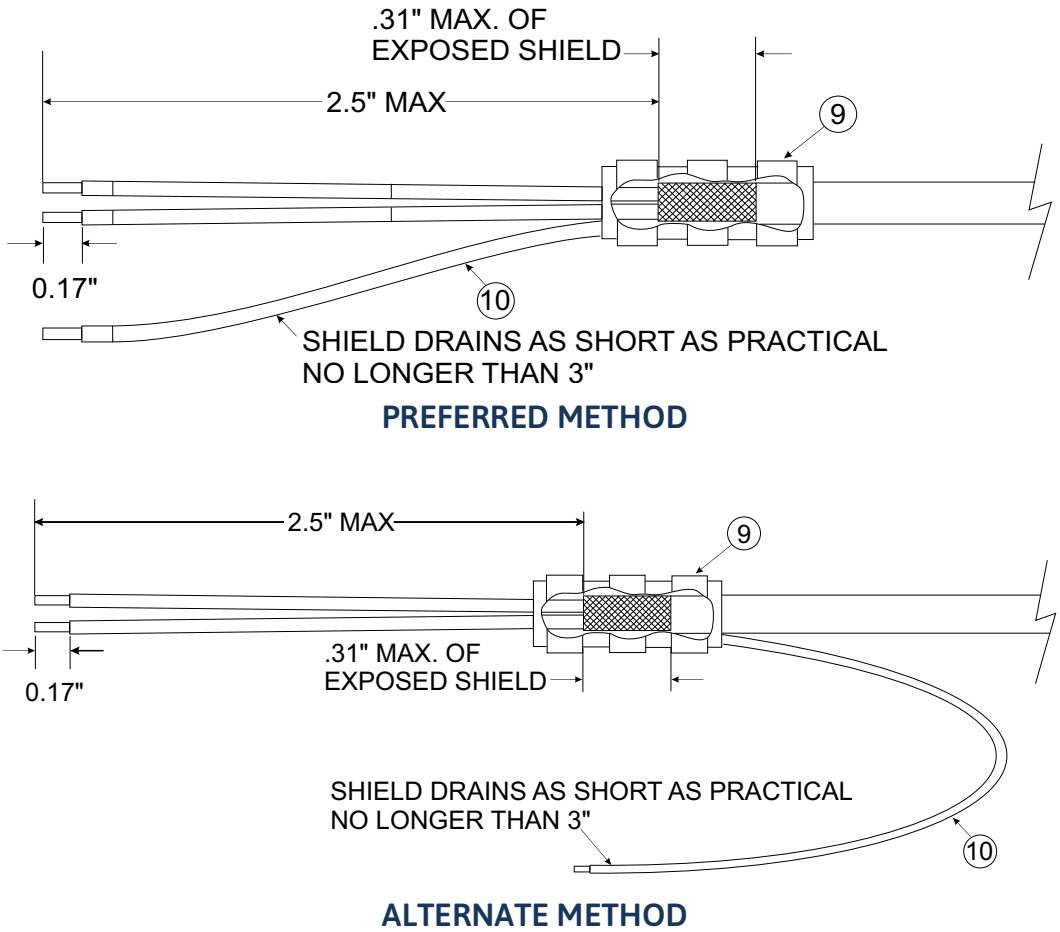

Figure 4-1 Shielded Cable Preparation

Figure 4-2 provides details for terminating the shield to the connector backshell. Skip to step 8 for wires without shielding.

1. At the end of the shielded cable (8), strip back a 2.5" maximum length of the jacket to expose the braid.
2. Remove exposed braid.
3. Carefully score the jacket 1/4" to 5/16" from the end and remove the jacket to leave the braid exposed.
4. Connect a 20 or 22 AWG wire (10) to the exposed shield of the prepared cable assembly.

NOTE

Alternatively, use a Raychem S-2 series solder sleeve with the thermochromic temperature indicator. These solder sleeves come with a pre-installed lead and effectively take the place of items 9 and 10. For detailed instructions on product use, refer to Raychem installation procedure.

5. Slide a shield terminator (9) onto the prepared cable assembly (8).
6. Connect the wire (10) to the shield using a heat gun approved for use with solder sleeves. The chosen size of solder sleeve must accommodate both the number of conductors present in the cable and the wire to be attached.
7. For the remaining shielded cables, repeat steps 1 through 6 as needed.
8. Strip wire going to the connectors at least 0.17". It is the responsibility of the installer to determine the proper length of insulation to be removed.
9. Insert the wire (10) into the pin (11).
10. Crimp pins (11) onto the wire.
11. Insert the pin into the connector (7) in accordance with wiring diagrams in section 10.
12. Verify that the pin is properly engaged into the connector by gently tugging on the wire.

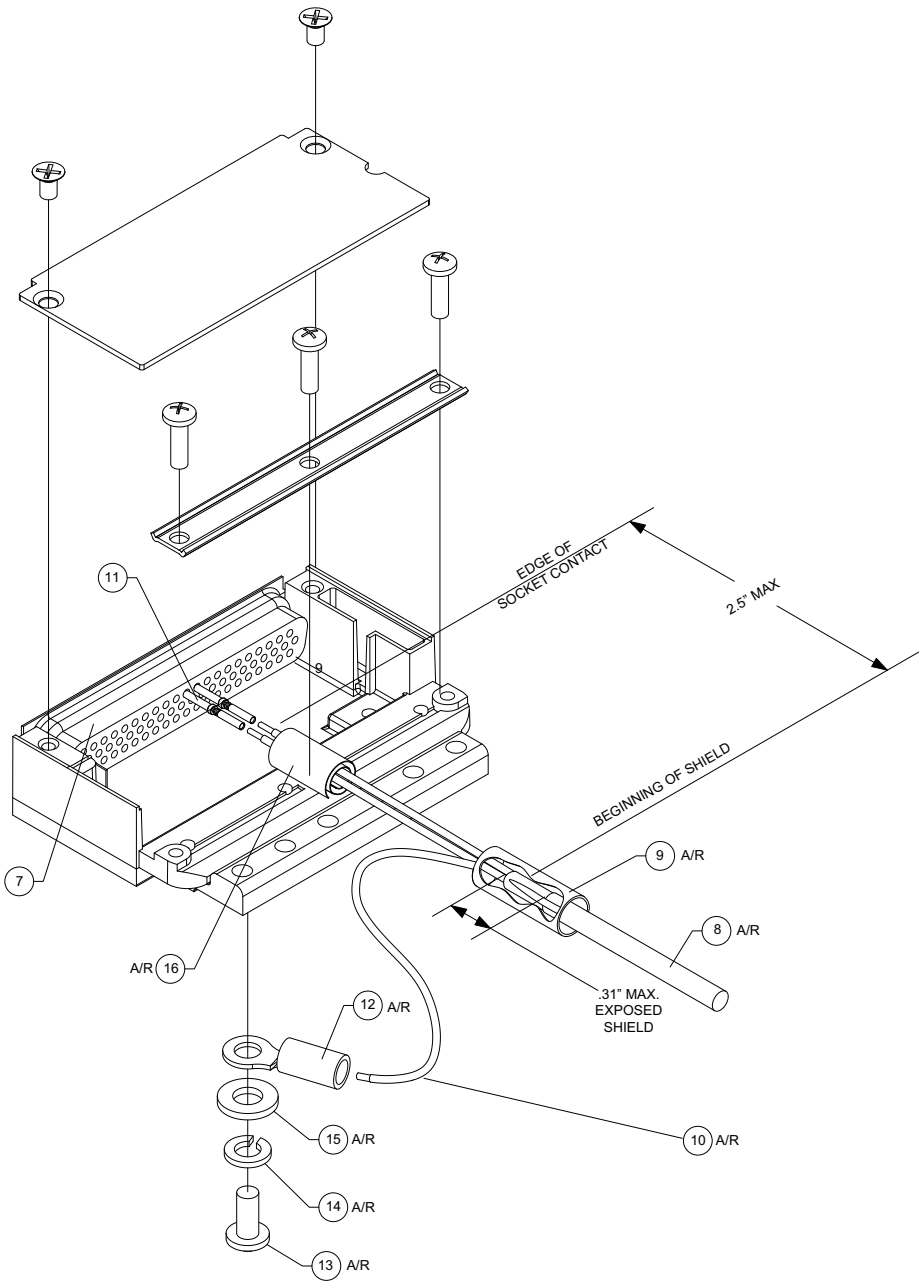

Figure 4-2 Preferred Method of Shield Termination on Backshell Assembly

Complete the following steps to assemble the backshell onto the connector. Refer to figure 4-2 and figure 4-3.

CAUTION

PLACING THE GROOVED SIDE OF THE STRAIN RELIEF (4) ACROSS THE WIRE HARNESS MAY DAMAGE WIRES.

1. Wrap the wire harness with silicone fusion tape (16 or a similar version) at the point where the backshell strain relief and cast housing will contact the wire harness.
2. Place the smooth side of the backshell strain relief (4) across the wire harness. As practical, each half of the strain relief bar should support half of the wire harness.
3. Use screws (3) to secure strain relief (4).
4. Attach the cover (5) to the backshell with two screws (6).
5. Install ring terminals (12) onto the 3" maximum shield drain wires (10), grouping wires as appropriate for the connector.
6. Terminate the ring terminals to the backshell (1) by placing items on the pan head screw (13) as shown in figure 4-2.
   a) split washer (14)
   b) flat washer (15)
   c) first ring terminal (12)
   d) second ring terminal, if needed
7. Insert the screw (13) into the tapped holes on the backshell.
8. Insert the assembled connector into the backplate.
9. Secure the connector (7) into the backplate with screws (2).

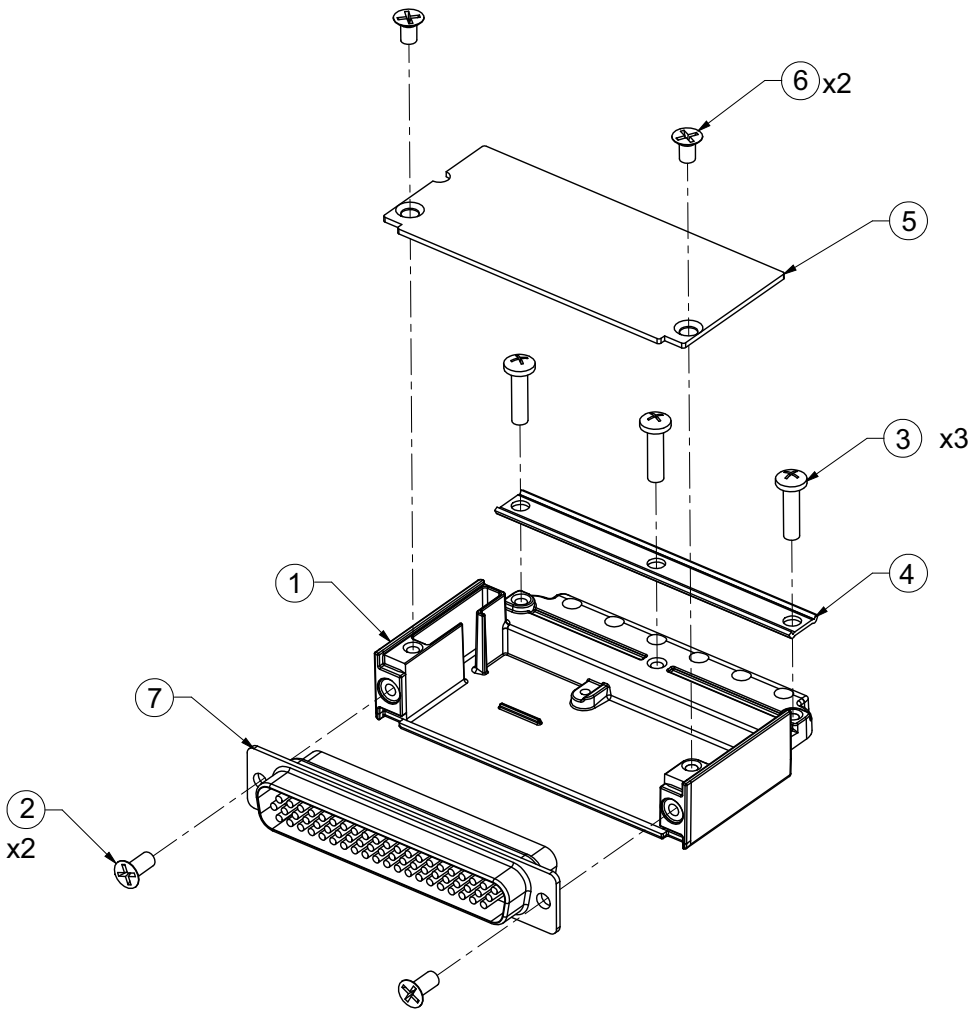

Figure 4-3 Connector and Backshell Assembly

4.9.1 Configuration Module Assembly with Potted PCB (GTR 205x)

1. Strip at least 0.17 inches of insulation from each wire prior to crimping. It is the responsibility of the installer to determine the proper length of insulation to be removed.
2. Crimp pins (3) onto each wire of the 4-conductor wire harness (2).
3. Insert the newly crimped pins and wires into the appropriate connector housing (4) location shown in figure 4-4.
4. Plug the 4-conductor wire harness into the connector on the PCB (1).
5. Insert the PCB into the backshell (5) recess.
6. Attach cover (6) to backshell using screws (7).

Table 4-12 Configuration Module Kit 011-00979-03

Refer to Figure 4-4	Description	Garmin P/N
1	Configuration module, PCB board assembly w/EEPROM	011-02178-00
2	4-conductor harness	325-00122-00
3	Pin contact, crimp, #22D	336-00021-00

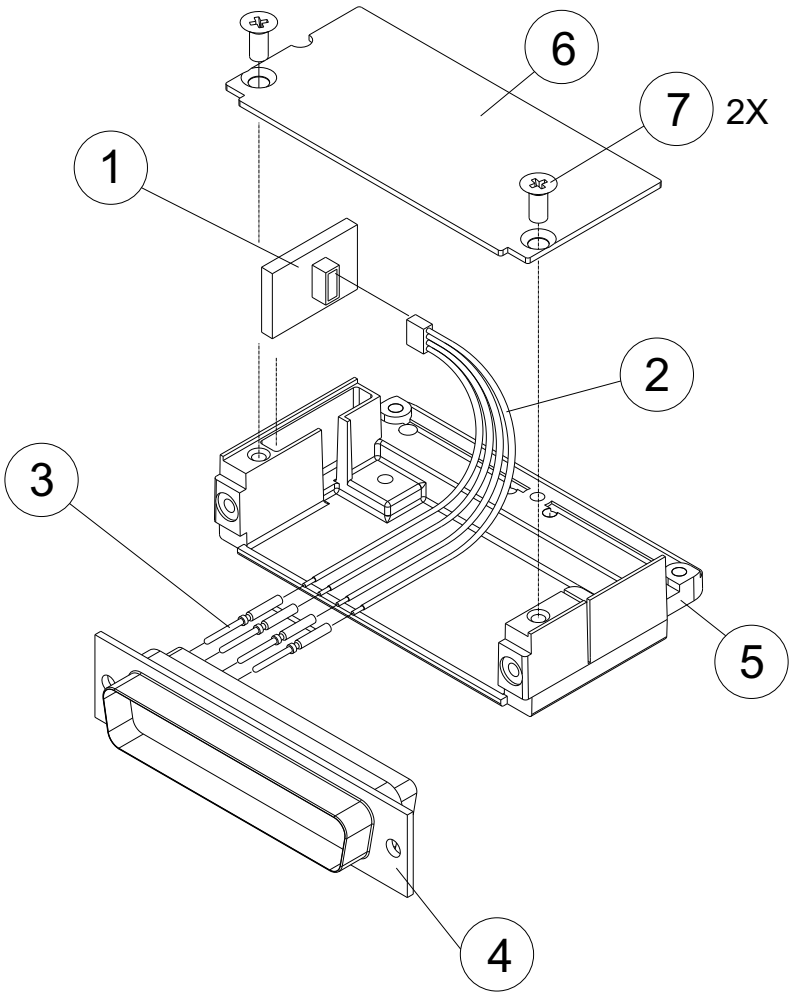

Figure 4-4 Backshell Assembly (Potted Configuration Module)

5 Connector Pinout Information

5.1 Pin Function List....5-2
5.1.1 GTR 205x....5-2
5.1.2 GTR 205xR....5-4
5.2 Functional Descriptions....5-6
5.2.1 Power and Ground Pins....5-6
5.2.2 Lighting Bus....5-6
5.2.3 Antennas....5-6
5.2.4 Serial Data – RS-232....5-7
5.2.5 COM Audio....5-8
5.2.6 Speaker Output....5-9
5.2.7 COM Discrete Inputs....5-9
5.2.8 Configurable Discrete Inputs....5-9
5.2.9 Configuration Module....5-11
5.2.10 AUX Pins....5-11
5.2.11 CAN Bus Pins....5-12
5.2.12 Ethernet (HSDB)....5-12
5.2.13 Headset Outputs....5-13
5.2.14 Discrete Outputs....5-13

5.1 Pin Function List

5.1.1 GTR 205x

(View looking at rear of unit)

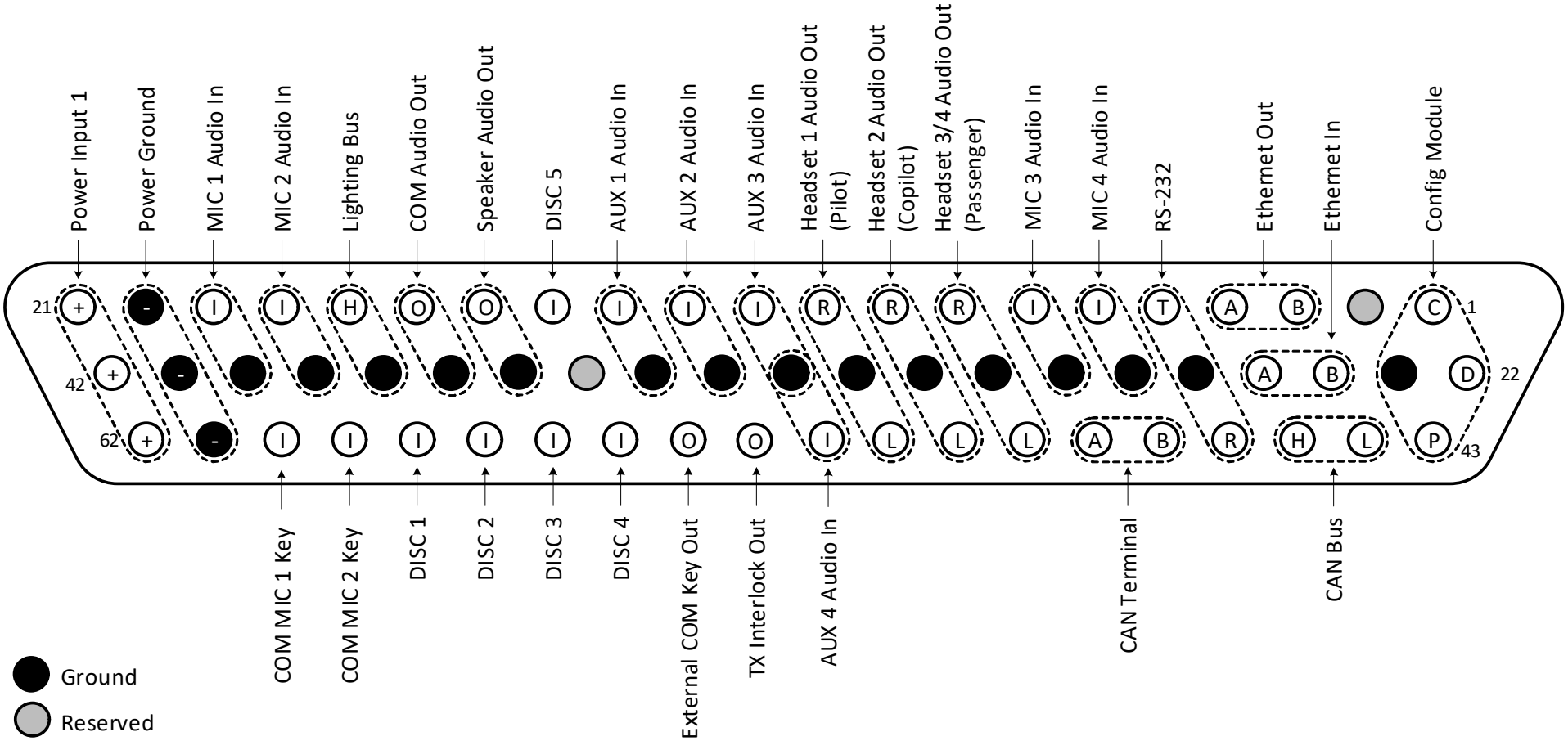

Figure 5-1 GTR 205x Pins

Table 5-1 GTR 205x Pins

Pin	Pin Name	I/O
1	CONFIG MODULE CLOCK	Out
2	RESERVED	--
3	ETHERNET OUT 1B	Out
4	ETHERNET OUT 1A	Out
5	RS-232 OUT	Out
6	MIC 4 AUDIO IN HI	In
7	MIC 3 AUDIO IN HI	In
8	HEADSET 3/4 AUDIO OUT RIGHT	Out
9	HEADSET 2 AUDIO OUT RIGHT	Out
10	HEADSET 1 AUDIO OUT RIGHT	Out
11	AUX 3 AUDIO IN HI	In
12	AUX 2 AUDIO IN HI	In
13	AUX 1 AUDIO IN HI	--
14	DISC 5*	In
15	SPEAKER AUDIO OUT HI	--
16	COM AUDIO OUT HI	Out
17	LIGHTING BUS HI	In
18	MIC 2 AUDIO IN HI	In
19	MIC 1 AUDIO IN HI	In
20	AIRCRAFT GROUND	--
21	AIRCRAFT POWER	In
22	CONFIG MODULE DATA	I/O

Pin	Pin Name	I/O
23	CONFIG MODULE GROUND	--
24	ETHERNET IN 1B	In
25	ETHERNET IN 1A	In
26	RS-232 GROUND	--
27	MIC 4 AUDIO IN LO	In
28	MIC 3 AUDIO IN LO	In
29	HEADSET 3/4 AUDIO OUT LO	Out
30	HEADSET 2 AUDIO OUT LO	Out
31	HEADSET 1 AUDIO OUT LO	Out
32	AUX 3/4 AUDIO IN LO	In
33	AUX 2 AUDIO IN LO	In
34	AUX 1 AUDIO IN LO	In
35	RESERVED	--
36	SPEAKER AUDIO OUT LO	Out
37	COM AUDIO OUT LO	Out
38	LIGHTING BUS LO	In
39	MIC 2 AUDIO IN LO	In
40	MIC 1 AUDIO IN LO	In
41	AIRCRAFT GND	--
42	AIRCRAFT POWER	In
43	CONFIG MODULE POWER	Out
44	CAN BUS LO	I/O

Pin	Pin Name	I/O
45	CAN BUS HI	
46	RS-232 IN	
47	CAN BUS TERM B	
48	CAN BUS TERM A	
49	HEADSET 3/4 AUDIO OUT LEFT	
50	HEADSET 2 AUDIO OUT LEFT	
51	HEADSET 1 AUDIO OUT LEFT	
52	AUX 4 AUDIO IN HI	
53	TX INTERLOCK OUT	
54	EXTERNAL COM KEY OUT	
55	DISC 4*	
56	DISC 3*	
57	DISC 2*	
58	DISC 1*	
59	COM MIC 2 KEY*	
60	COM MIC 1 KEY *	
61	AIRCRAFT GROUND	
62	AIRCRAFT POWER	

An asterisk (*) following a signal name denotes that the signal is an Active-Low, requiring a ground to activate. If there is no asterisk, the signal is an Active-High.

5.1.2 GTR 205xR

(View looking at rear of unit)

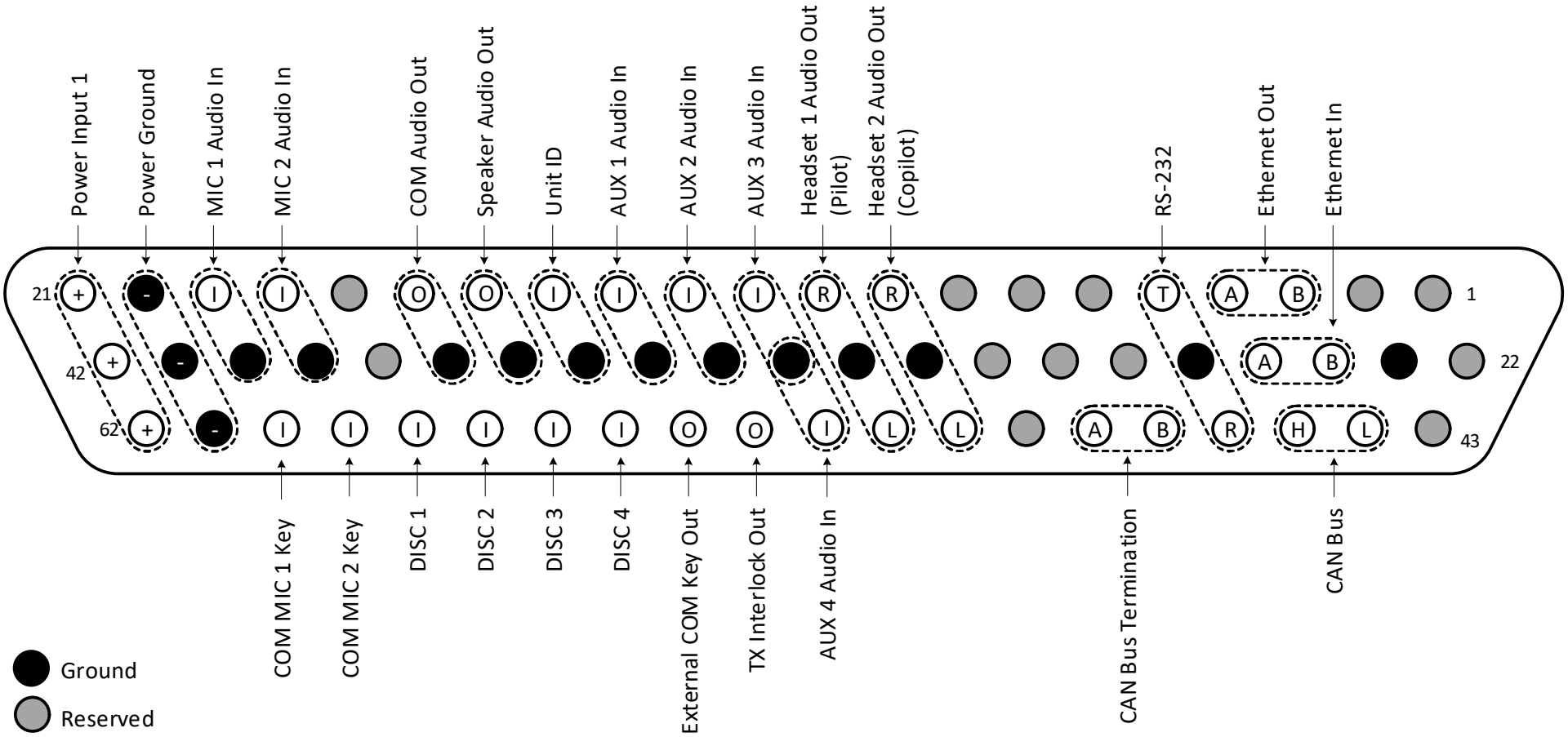

Figure 5-2 GTR 205xR Pins

Table 5-2 GTR 205xR Pins

Pin	Pin Name	I/O
1	RESERVED	--
2	RESERVED	--
3	ETHERNET OUT 1B	Out
4	ETHERNET OUT 1A	Out
5	RS-232 OUT	Out
6	RESERVED	--
7	RESERVED	--
8	RESERVED	--
9	HEADSET 2 AUDIO OUT RIGHT	Out
10	HEADSET 1 AUDIO OUT RIGHT	Out
11	AUX 3 AUDIO IN HI	In
12	AUX 2 AUDIO IN HI	In
13	AUX 1 AUDIO IN HI	In
14	UNIT ID IN	In
15	SPEAKER AUDIO OUT HI	Out
16	COM AUDIO OUT HI	Out
17	RESERVED	--
18	MIC 2 AUDIO IN HI	In
19	MIC 1 AUDIO IN HI	In
20	AIRCRAFT GROUND	--
21	AIRCRAFT POWER	In
22	RESERVED	--

Pin	Pin Name	I/O
23	GROUND	--
24	ETHERNET IN 1B	In
25	ETHERNET IN 1A	In
26	RS-232 GROUND	--
27	RESERVED	--
28	RESERVED	--
29	RESERVED	--
30	HEADSET 2 AUDIO OUT LO	Out
31	HEADSET 1 AUDIO OUT LO	Out
32	AUX 3/4 AUDIO IN LO	In
33	AUX 2 AUDIO IN LO	In
34	AUX 1 AUDIO IN LO	In
35	UNIT ID GROUND	Out
36	SPEAKER AUDIO OUT LO	Out
37	COM AUDIO OUT LO	Out
38	RESERVED	--
39	MIC 2 AUDIO IN LO	In
40	MIC 1 AUDIO IN LO	In
41	AICRAFT GROUND	--
42	AIRCRAFT POWER	In
43	RESERVED	--
44	CAN BUS LO	I/O

Pin	Pin Name	I/O
45	CAN BUS HI	I/O
46	RS-232 IN	In
47	CAN BUS TERM B	--
48	CAN BUS TERM A	--
49	RESERVED	--
50	HEADSET 2 AUDIO OUT LEFT	Out
51	HEADSET 1 AUDIO OUT LEFT	Out
52	AUX 4 AUDIO IN HI	In
53	TX INTERLOCK OUT	Out
54	EXTERNAL COM KEY OUT	Out
55	DISC 4*	In
56	DISC 3*	In
57	DISC 2*	In
58	DISC 1*	In
59	COM MIC 2 KEY*	In
60	COM MIC 1 KEY *	In
61	AIRCRAFT GROUND	--
62	AIRCRAFT POWER	In

An asterisk (*) following a signal name denotes that the signal is an Active-Low, requiring a ground to activate. If there is no asterisk, the signal is an Active-High.

5.2 Functional Descriptions

Information about power input requirements, lighting bus input, and antenna connections for the GTR is provided in this section. Refer to section 10 for interconnect information.

5.2.1 Power and Ground Pins

Power inputs P1-21, P1-42, and P1-62 provide power for the COM radio. All three pins must be connected.

Table 5-3 Power and Ground Pins

Pin Name	Pin	I/O
AIRCRAFT POWER	21	In
AIRCRAFT POWER	42	In
AIRCRAFT POWER	62	In
AIRCRAFT GROUND	20	--
AIRCRAFT GROUND	41	--
AIRCRAFT GROUND	61	--

5.2.2 Lighting Bus

CAUTION

CONNECTION OF THE LIGHTING BUS TO INCORRECT PINS CAN CAUSE DAMAGE TO THE UNIT THAT WILL REQUIRE RETURN TO THE FACTORY FOR REPAIR. ENSURE THAT THE LIGHTING BUS IS CONNECTED TO THE CORRECT PINS AND DOES NOT SHORT TO ANY ADJACENT PINS PRIOR TO APPLYING POWER TO THE UNIT, INCLUDING THE LIGHTING BUS.

Table 5-4 Lighting Pins

Pin Name	Pin	I/O
LIGHTING BUS HI	17	In
LIGHTING BUS LO	38	In

5.2.3 Antennas

Antennas use BNC coaxial connectors on the connector backplate.

Table 5-5 Antenna Pins

Pin Name	I/O
COM ANTENNA	I/O

5.2.4 Serial Data – RS-232

Table 5-6 RS-232 Pins

Pin Name	Pin	I/O
RS-232 OUT	5	Out
RS-232 IN	46	In
RS-232 GND	26	--

Aviation Out Type 1 and 2 Format

NOTE
Aviation RS-232 data may be transmitted with or without the current GPS altitude in feet. Refer to section 8.

The GTR is capable of interfacing with other aviation instruments by receiving Aviation Out Type 2 data on the RS-232 port. Refer to section 8.1 for a detailed data format description. The data consists of the following information.

- Current latitude and longitude
- Magnetic variation

NMEA Format

NMEA Inputs:

- Active/standby COM frequency
- COM volume level
- Squelch override
- COM monitor mode
- Remote airport ident/frequency list
- Active/standby COM frequency with ident
- COM frequency lookup table

NMEA Outputs:

- COM transceiver status (active/standby frequency)
- COM Volume level
- Software version
- GTR status

5.2.5 COM Audio

COM Audio Function

Activation of COM MIC 1 TRANSMIT enables MIC 1 AUDIO IN HI and causes the transceiver to transmit.

Activation of COM MIC 2 TRANSMIT enables MIC 2 AUDIO IN HI and causes the transceiver to transmit.

500 Ω COM AUDIO is a 65 mW audio output that is intended to drive a headset or an audio panel.

COM Audio Electrical Characteristics

FAIL-SAFE AUDIO

When the unit loses power, internal relays connect:

- AUX 1 to Pilot Headset Left
- MIC 1 to COM Audio Out.
- MIC 1 Key input to COM Tx Key

COM MIC AUDIO

MIC 1, MIC 2, MIC 3, and MIC 4 are standard carbon or dynamic mic inputs with integrated preamps providing minimum 70 mVrms into a 600 Ω load.

MIC 1, MIC 2, MIC 3, and MIC 4 are set in the factory so that 500 mVrms modulates the transmitter to 90% nominally at 1000 Hz. The microphone gain adjustment is made through configuration mode.

Table 5-7 MIC Pins

Pin Name	Pin	I/O
MIC 1 AUDIO IN HI	19	In
MIC 2 AUDIO IN HI	18	In
MIC 3 AUDIO IN HI	7	In
MIC 4 AUDIO IN HI	6	In
MIC 1 AUDIO IN LO	40	In
MIC 2 AUDIO IN LO	39	In
MIC 3 AUDIO IN LO	28	In
MIC 4 AUDIO IN LO	27	In

COM AUDIO

COM AUDIO supplies 65 mW into a 500 Ω load. This is a balanced output and the LO output must be connected.

COM AUDIO is the summation of the COM receiver audio, COM sidetone audio, and intercom audio.

Table 5-8 COM Audio Pins

Pin Name	Pin	I/O
COM AUDIO OUT HI	16	Out
COM AUDIO OUT LO	37	Out

5.2.6 Speaker Output

The speaker output is 12 W into a 4 Ω load.

Table 5-9 Speaker Output

Pin Name	Pin	I/O
SPEAKER AUDIO OUT HI	15	Out
SPEAKER AUDIO OUT LO	36	Out

5.2.7 COM Discrete Inputs

Active-Low discrete inputs are considered active if either the voltage to ground is ≤ 3.5 VDC or the resistance to ground is ≤ 375 Ω. These inputs are considered inactive if the voltage to ground is 6.5-33 VDC or the resistance to ground is > 100 kΩ.

Active-High discrete inputs are considered active if the voltage to ground is > 6.5 VDC. These inputs are considered inactive if the voltage to ground is ≤ 3.5 VDC or the resistance to ground is ≤ 375 Ω.

An asterisk (*) following a signal name denotes that the signal is an Active-Low, requiring a ground to activate. If there is no asterisk, the signal is an Active-High.

COM MIC 1 KEY*

COM MIC 1 KEY* discrete input, when pulled low, allows the audio that is present on the MIC 1 AUDIO IN HI (P1-19) to be transmitted over the radio.

COM MIC 2 KEY*

COM MIC 2 KEY* discrete input, when pulled low, allows the audio that is present on the MIC 2 AUDIO IN HI (P1-18) to be transmitted over the radio.

Table 5-10 COM Discrete Inputs

Pin Name	Pin	I/O
COM MIC 1 KEY*	60	In
COM MIC 2 KEY*	59	In

5.2.8 Configurable Discrete Inputs

Configurable discrete inputs are considered active if either the voltage to ground is ≤ 3.5 VDC or the resistance to ground is ≤ 375 Ω. This input is considered inactive if the voltage to ground is 11-33 VDC or the resistance to ground is > 100 kΩ. The default setting is Off for all discrete inputs. All configurable discrete inputs are optional.

An asterisk (*) following a signal name denotes that the signal is an Active-Low, requiring a ground to activate. If there is no asterisk, the signal is an Active-High.

COM REMOTE TRANSFER*

The COM REMOTE TRANSFER* discrete input is used to flip-flop between the active and standby COM frequencies. A momentary low on this pin will load the standby COM frequency into the active COM frequency field.

The COM REMOTE TRANSFER* input is used for emergency operation of the COM transmitter. If the switch is depressed for two seconds, the active COM frequency changes to 121.500 MHz.

COM REMOTE TRANSFER (LOCKOUT)* (GTR 205xR)

The COM Remote Transfer (Lockout)* discrete input is used to flip-flop between the active and standby COM frequencies. A momentary low on this pin loads the standby COM frequency into the active COM frequency field.

The COM Remote Transfer (Lockout)* input is used to toggle lockout mode. If the switch is depressed for two seconds, GTR 205xR enters lockout mode. After more than two seconds in lockout mode, if the switch is depressed again for two seconds the GTR 205xR returns to normal mode.

HOLD FOR LOCKOUT* (GTR 205xR)

The Hold for Lockout* discrete input is used to toggle lockout mode. If the switch is depressed for two seconds GTR 205xR enters lockout mode. After more than two seconds in lockout mode, if the switch is depressed again for two seconds the GTR 205xR returns to normal mode.

COM REMOTE TUNE UP*

The COM REMOTE TUNE UP* discrete input is used to scroll through a list of preset COM frequencies. A momentary low on this pin will load the next preset frequency in the list into the standby COM frequency field.

COM REMOTE TUNE DOWN*

The COM REMOTE TUNE DOWN* discrete input is used to scroll through a list of preset COM frequencies. A momentary low on this pin will load the previous preset frequency in the list into the standby COM frequency field.

COM STANDBY MONITOR*

The COM STANDBY MONITOR* discrete input is used to monitor standby COM frequency audio. A momentary low on this pin will toggle the COM standby monitor ON and OFF.

TX Interlock In*

The TX Interlock* discrete input desensitizes the receiver of the COM radio. In dual COM installations, the discrete input prevents interference from the second radio.

Pilot ICS Key*

The PILOT ICS KEY* discrete input activates the pilot's microphone for the ICS. When active, the unit bypasses MIC 1 intercom squelch. When configured, the automatic squelch function is disabled on all ICS microphone inputs. When not configured, the automatic squelch function determines Pilot ICS activation.

Copilot ICS Key*

The COPILOT ICS KEY* discrete input activates the pilot's microphone for the ICS. When active, the unit bypasses MIC 2 intercom squelch. When configured, the automatic squelch function is disabled on all ICS microphone inputs. When not configured, the automatic squelch function determines Copilot ICS activation.

Passenger ICS Key* (GTR 205x)

The PASSENGER ICS KEY* discrete input activates the passenger's microphone for the ICS. When active, the unit bypasses MIC 3/4 intercom squelch. When configured, the automatic squelch function is disabled on all ICS microphone inputs. When not configured, the automatic squelch function determines Passenger ICS activation.

COM Playback* (GTR 205x)

The COM Playback* discrete input plays the most recent COM recording. When activated, it replaces both soft keys with STOP and OLDR to stop the playback recording and navigate to older clips, respectively.

COM MIC Swap* (GTR 205x)

When the unit is configured for Dual-COM, the COM MIC Swap* discrete swaps the active COM radio for transmission.

Table 5-11 Configurable Discrete Input Pins

Pin Name	Pin	I/O
DISC 1*	58	In
DISC 2*	57	In
DISC 3*	56	In
DISC 4*	55	In
DISC 5* (GTR 205x)	14	In

An asterisk (*) following a signal name denotes that the signal is an Active-Low, requiring a ground to activate.

5.2.9 Configuration Module

Table 5-12 Configuration Module

Pin Name	Pin	I/O
CONFIG MODULE CLOCK	1	Out
CONFIG MODULE DATA	22	I/O
CONFIG MODULE GROUND	23	--
CONFIG MODULE POWER	43	Out

5.2.10 AUX Pins

AUX 1 HI and AUX 2 HI are limited to 5 V_{RMS}. AUX 3 HI and AUX 4 HI are limited to 1.5 V_{RMS}.

Table 5-13 AUX Pins

Pin Name	Pin	I/O	Max V_{RMS}
AUX 1 AUDIO IN HI	13	In	5
AUX 2 AUDIO IN HI	12	In	5
AUX 3 AUDIO IN HI	11	In	1.5
AUX 4 AUDIO IN HI	52	In	1.5
AUX 1 AUDIO IN LO	34	--	--
AUX 2 AUDIO IN LO	33	--	--
AUX 3/4 AUDIO IN LO	32	--	--

5.2.11 CAN Bus Pins

The GTR should only be terminated if it is located at the end of the CAN bus. To terminate the CAN bus at the GTR, short pins 47 and 48 together, this creates a 120 ohm termination internal to the GTR LRU. If installed, the jumper between pins 47 and 48 should be 3" or less, and contained completely within the connector backshell.

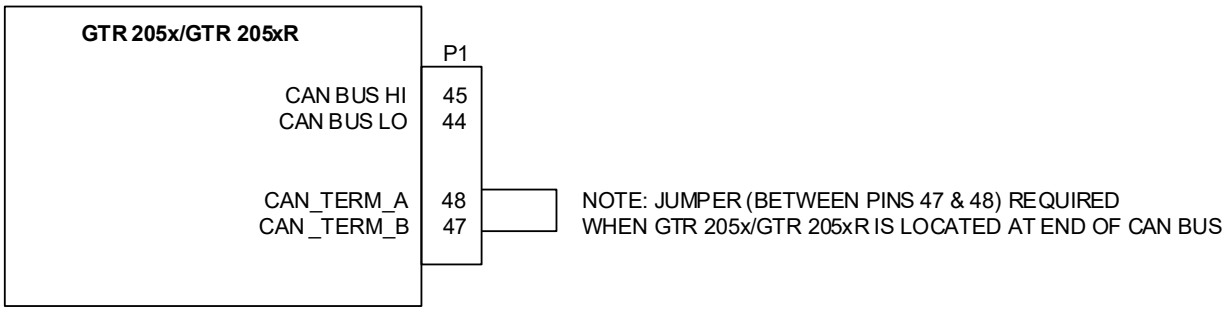

Figure 5-3 CAN Bus Pins

Table 5-14 CAN Bus Pins

Pin Name	Pin	I/O
CAN BUS LO	44	I/O
CAN BUS HI	45	I/O
CAN TERM B	47	--
CAN TERM A	48	--

5.2.12 Ethernet (HSDB)

Ethernet based HSDB meets the hardware aspects of IEEE standard 802.3 for 10 base T Ethernet communications.

Table 5-15 GTR/GNC Ethernet (HSDB) Pins

Pin Name	Pin	I/O
ETHERNET IN 1A	25	In
ETHERNET IN 1B	24	In
ETHERNET OUT 1A	4	Out
ETHERNET OUT 1B	3	Out

5.2.13 Headset Outputs

Table 5-16 Headset Output Pins

Pin Name	Pin	I/O
HEADSET 3/4 AUDIO OUT RIGHT	8	Out
HEADSET 2 AUDIO OUT RIGHT	9	Out
HEADSET 1 AUDIO OUT RIGHT	10	Out
HEADSET 3/4 AUDIO OUT LO	29	Out
HEADSET 2 AUDIO OUT LO	30	Out
HEADSET 1 AUDIO OUT LO	31	Out
HEADSET 3/4 AUDIO OUT LEFT	49	Out
HEADSET 2 AUDIO OUT LEFT	50	Out
HEADSET 1 AUDIO OUT LEFT	51	Out

5.2.14 Discrete Outputs

The TX INTERLOCK OUT* will be pulled low when the GTR 205x/205xR is transmitting. EXTERNAL COM KEY OUT* activates when the MIC key is triggered.

Table 5-17 Discrete Output Pins

Pin Name	Pin	I/O
TX INTERLOCK OUT*	53	Out
EXTERNAL COM KEY OUT*	54	Out

6 System Configuration

6.1 System Configuration Overview 6-3
6.2 Mounting, Wiring, and Power Checks 6-3
6.3 Connector Engagement Check 6-3
6.4 Configuration Mode Operations 6-4
6.4.1 SYS Setup 6-5
6.4.2 Unit Setup 6-7
6.4.3 Interfaces 6-17
6.4.4 SD Save 6-20
6.4.5 Test 6-21
6.4.6 Diagnostics 6-21
6.5 Ground Checks (Configuration Mode) 6-27
6.5.1 Lighting Bus Interface Check 6-27
6.6 Ground Checks (Normal Mode) 6-28
6.6.1 Discrete Input Checkout 6-28
6.6.2 VHF COM 6-29
6.6.3 Database Check 6-29
6.6.4 Serial Interface Checks 6-29
6.6.5 Fail-safe Audio Mode 6-29
6.7 Flight Checks 6-30
6.7.1 COM Flight Check 6-30
6.8 Software Loading 6-31
6.9 Screenshots 6-32

System at a Glance

This section provides complete instructions for configuring GTR 205x functionality. Screenshots are for reference only.

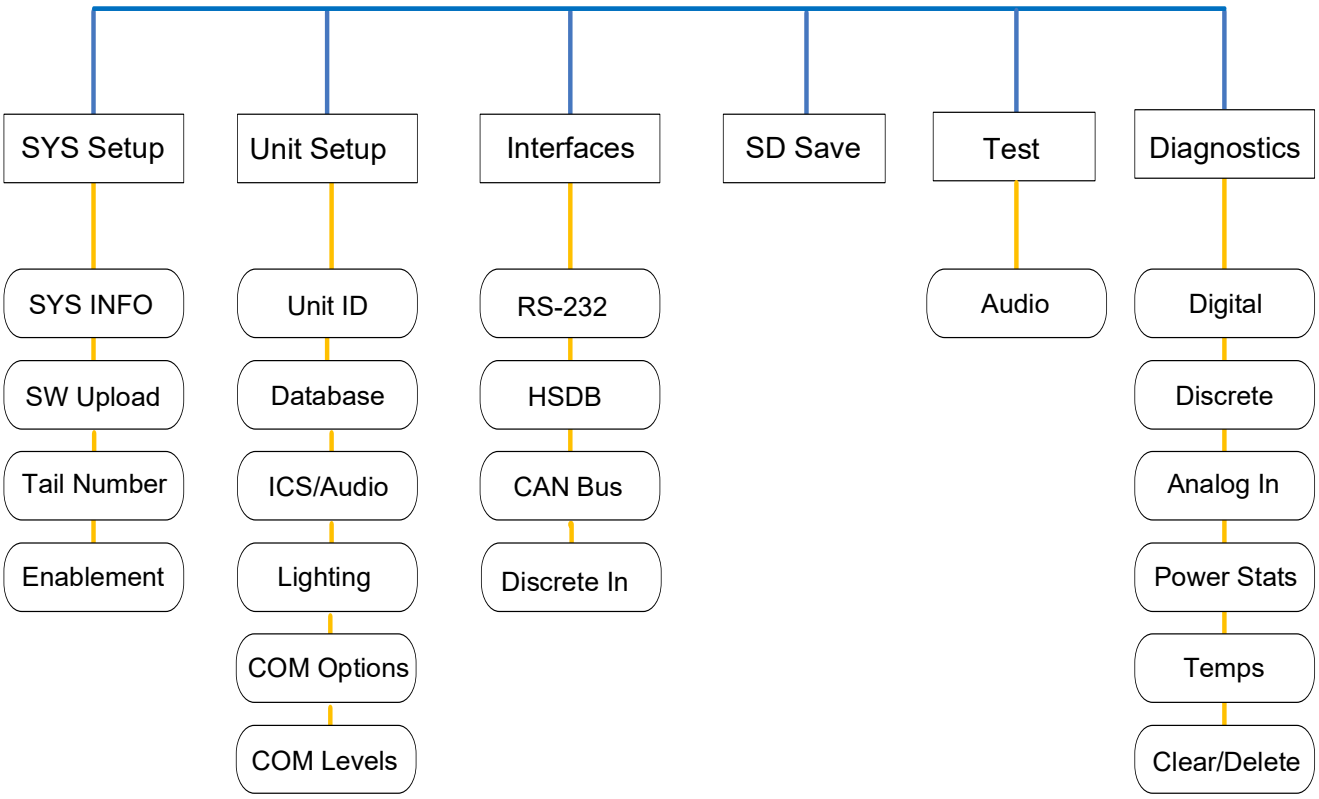

Figure 6-1 GTR 205x System Configuration Map

6.1 System Configuration Overview

Checkout and configuration instructions for the GTR is provided in this section.

- Configure the GTR for the specific installation
- Perform the installation checks
- Perform ground checks to verify the interfaces to external sensors
- Perform the specified flight checks

6.2 Mounting, Wiring, and Power Checks

CAUTION

CONNECTION OF THE POWER OR LIGHTING BUS TO INCORRECT PINS CAN CAUSE DAMAGE TO THE UNIT, WHICH WILL REQUIRE RETURN TO THE FACTORY FOR REPAIR. ALWAYS START TESTS WITH THE DIMMING BUS AT THE LOWEST SETTING, AND SLOWLY INCREASE THE BRIGHTNESS. VERIFY THE WIRING IS CORRECT IF IT IS NOTICED THE LIGHTING LEVEL ON THE GTR 205x/GTR 205xR DOES NOT INCREASE AS THE LIGHTING BUS INPUT IS INCREASED IN BRIGHTNESS.

Verify that all cables are properly secured and shields are connected to the backshell of the connectors. Check the movement of the flight and engine controls to verify there is no interference between the cabling and control systems. Ensure that all wiring is installed as described in section 3.4.

Prior to powering up the GTR, the wiring harness must be checked for proper connections to the aircraft systems and other avionics equipment. Point to point continuity must be checked to expose any faults such as shorting to ground. Any faults or discrepancies must be corrected before proceeding.

After accomplishing a continuity check, perform power and ground checks to verify proper power distribution to the GTR. Any faults or discrepancies should be corrected at this time. Remove power from the aircraft upon completion of the harness checkout.

The GTR can be installed after completion of the continuity and power checks. The GTR should be installed into the rack and secured appropriately, as described in section 4.7.1. The GTR must be connected to the wiring harness and antennas.

6.3 Connector Engagement Check

Check the connector engagement prior to configuration and checkout of the GTR.

1. Turn on the avionics master switch (if installed).
2. Place the GTR in the rack and engage the cam mechanism.
3. Turn the Allen screw of the locking cam (located on the lower right side of the unit) slowly clockwise until the GTR just powers on. A T-handle can be used for this, but ensure that the screw is not over-tightened.
4. Count the number of complete revolutions the Allen screw can be turned until it cannot turn any more. Do not over-tighten. Three turns is the minimum for proper installation. If fewer than three turns are possible, the mounting rack should be moved aft (toward the pilot) such that the aircraft panel does not obstruct the unit from properly engaging in the rack.

6.4 Configuration Mode Operations

NOTE

GTR 205xR can be configured when a compatible flight display is connected.

The configuration pages shown in this section reflect main software v2.31. Some differences in operation may be observed when comparing the information in this manual to later software versions.

Configuration mode is used to configure settings for each specific installation.

To access configuration mode:

1. Remove power from the unit.
2. Press and hold the right inner knob.
3. Apply power to the unit by turning the COM volume knob.
4. When "Garmin" appears on the screen release knob.

The first page displayed is the Configuration Mode Home page.

- SYS Setup
- Unit Setup
- Interfaces
- SD Save
- Test
- Diagnostics

Navigating Configuration Mode

There are four to six tabs, each containing multiple items. Each item launches a page.

- Turn outer knob to scroll tabs
- Turn inner knob to access items
- Press inner knob to access page

Press the inner knob to:

- Confirm a selection
- Enable or disable a feature - A green bar indicates the feature is enabled

Press **Home** to return to SYS Setup tab.

Press **Back** to go back to a previous page. The flip-flop key has the same function as **Back**.

Press **MENU** to return to the list of tabs and items.

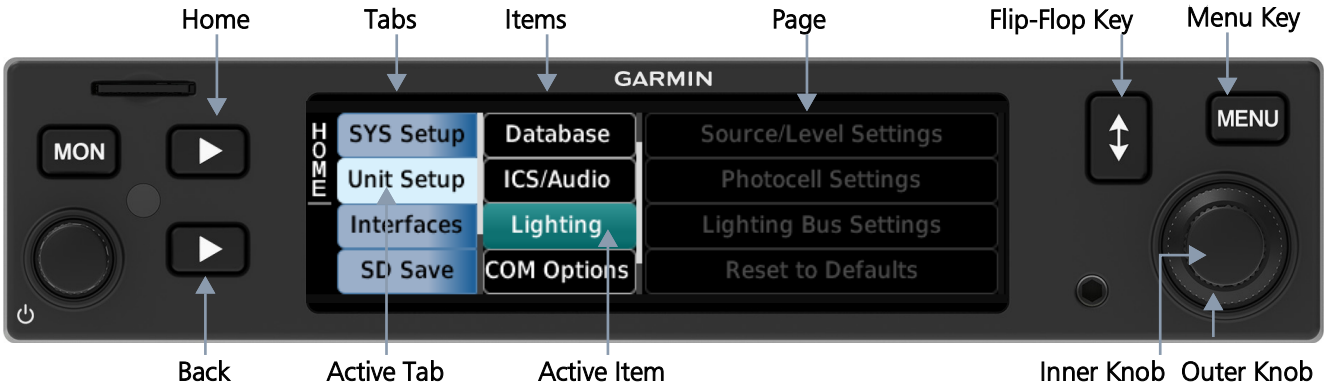

Figure 6-2 Controls in Configuration Mode

6.4.1 SYS Setup

The SYS Setup includes:

- SYS INFO
- SW Upload
- Tail Number
- Enablement

SYS INFO

The SYS INFO page displays information of the installed unit. There are no configurable items.

- Unit type
- Serial number
- System ID
- SW version
- SW part number
- Description
- Bluetooth version
- Bluetooth part number
- SW Key Version
- SW Key part number
- Database Key Version
- Database Key part number
- Boot block lock version
- Boot block part number
- Hardware Version

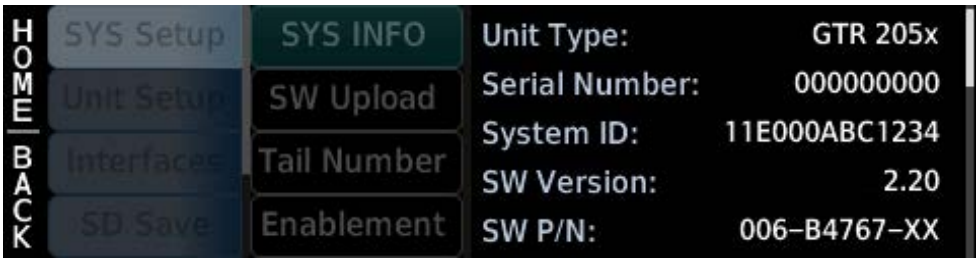

Figure 6-3 SYS Info Page

SW Upload

Figure 6-4 SW Upload Page

Tail Number

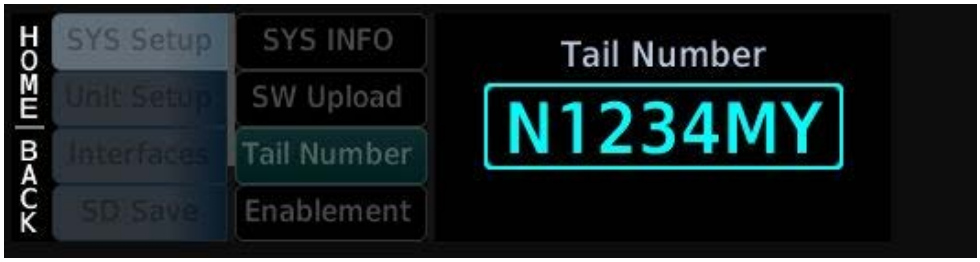

Figure 6-5 Tail Number Page

Enablement

An enablement card is necessary to activate Night Vision, 16W COM Transmit, and Audio Panel features. A green bar displays when the feature is active.

A red padlock icon indicates the feature is locked and needs an enablement card. If the key to the right of the padlock is available, an enablement card has been detected.

A green padlock icon indicates the feature is unlocked. The enablement card does not need to be reinserted to enable the feature again. Push the inner knob to enable or disable the feature. The feature remains unlocked as long as a configuration module is attached.

Figure 6-6 Enablement Page

6.4.2 Unit Setup

The Unit Setup includes:

- Unit ID
- Database
- ICS/Audio
- Lighting
- COM Options
- COM Levels

Unit ID

NOTE

GTR 205xR Unit ID is changeable with a strapped switch and not via other GDU interfaces. Refer to figure 10-2 for configuration.

Unit ID sets the unit as GTR 1 or GTR 2.

Table 6-1 Unit ID Selections

Selection	Setting	Description
Unit ID	GTR 1 (Default)	COM #1
	GTR 2	COM #2

Figure 6-7 Unit ID Page

Database

Database sets the location of database.

Table 6-2 Database Selections

Selection	Setting	Description
Database	Internal	The unit utilizes the Navigation database installed locally.
	External	The unit utilizes the Navigation database installed on an interfaced device.

Figure 6-8 Database Page

ICS/Audio

The ICS/Audio can be internal or external. When the ICS/Audio is external, only Speaker and Speaker Volume can be configured.

Table 6-3 Internal ICS/Audio Selections

Selection	Setting	Description
ICS/Audio	Internal ICS	Intercom and audio features are controlled on the unit.
	External	Intercom and audio features are controlled by another unit.
Intercom Type	2-Seat	Intercom is configured for two seats.
	4-Seat	Intercom is configured for four seats. [1]
Pilot Position	Left	The pilot is seated on the left side of the cockpit.
	Right	The pilot is seated on the right side of the cockpit.
Aux Audio Inputs	Refer to table 6-4 "AUX Audio Input Selections."	
Speaker	Connected	Speaker is connected if a green bar displays.
	Not Connected	Speaker is disconnected if a green bar does not display.
Speaker Volume	0% to 100%	Adjusts the volume output of the speaker.
Bluetooth	Enable	Bluetooth is enabled if a green bar displays.
	Disable	Bluetooth is disabled.

[1] Available only with the Audio Panel enablement.

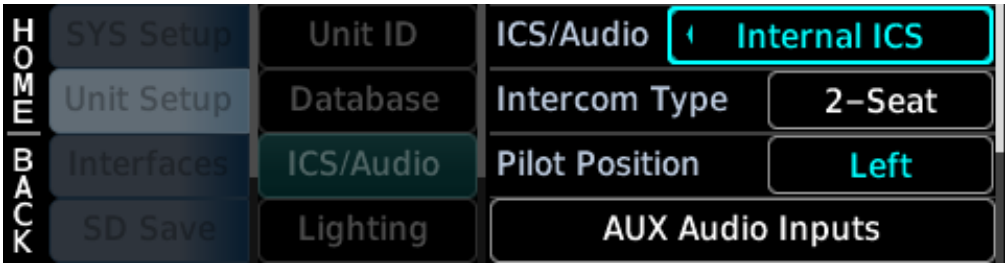

Figure 6-9 ICS/Audio Page with Audio Panel Enablement

Figure 6-10 ICS/Audio Page - External Audio

Table 6-4 AUX Audio Input Selections

Selection	Setting	Option	Label	Volume
AUX Input	AUX 1 AUX 2	Disable	N/A	N/A
		Pilot Control	[1]	0% to 100% Default 50%
		Unswitched	N/A	0% to 100% Default 50%
		External COM [2,3]	N/A	0% to 100% Default 50%
	AUX 3	Disable	N/A	N/A
		Pilot Control	[1]	0% to 100% Default 50%
		Unswitched	N/A	0% to 100% Default 50%
		Stereo Right	[1]	N/A
	AUX 4	Disable	N/A	N/A
		Pilot Control	[1]	0% to 100% Default 50%
		Unswitched	N/A	0% to 100% Default 50%
		Stereo Left	[1]	N/A
AUX Squelch	0% to 100%	N/A	N/A	N/A

[1] Customize to desired four character label.

[2] Software v2.30 includes TX Sidetone Source, with the options “Internal” or “External.”

[3] Available only with the Audio Panel enablement.

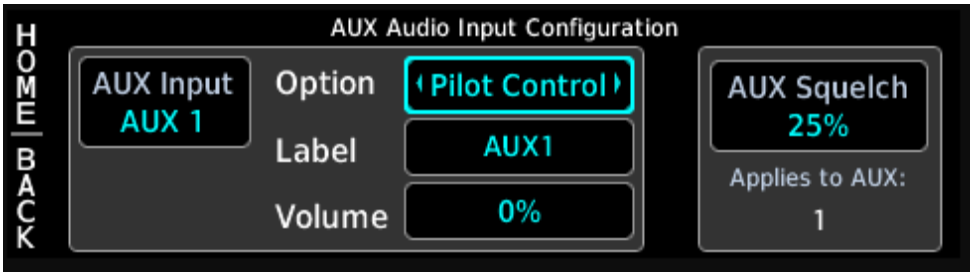

Figure 6-11 AUX Audio Input Configuration Page

Lighting

The Lighting tab accesses the page to set the lighting source and configure the lighting bus and photocell.

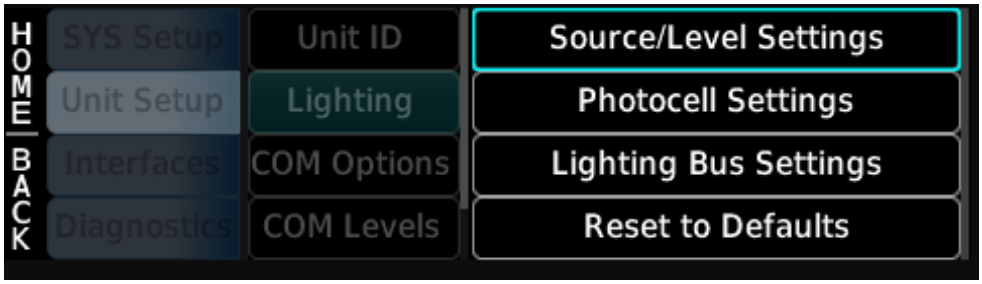

Figure 6-12 Unit Lighting Page

Source/Level Configuration

Table 6-5 Display and Keys Selections

Selection	Setting	Description
Source	Photocell	Photocell on unit bezel controls backlight level.
	Lighting Bus	Lighting bus controls backlight.
Min Level	0% - 100%	Minimum backlight brightness setting.

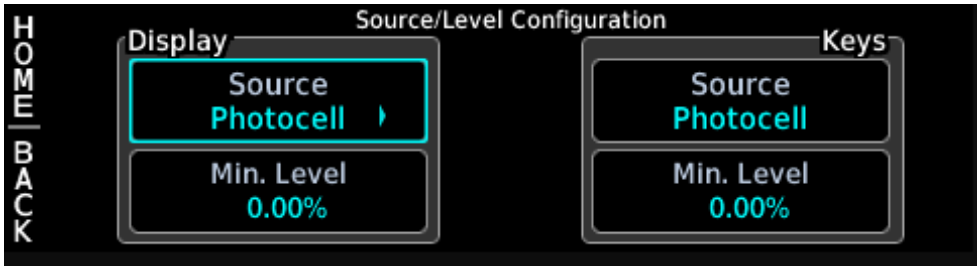

Figure 6-13 Source/Level Configuration Page

Photocell Settings

Table 6-6 Photocell Selections

Selection	Setting	Description
Photocell Configuration		
Response Time	2 (Default) - 7 seconds	Sets the speed with which the brightness responds to the input level (bus voltage or ambient light) changes. The higher the number the slower the display responds.
Slope	0 - 100 (Default is 50)	Sets the sensitivity the brightness of the display has to changes in the input level. The higher the number, the brighter the display for a given increase in the input level.
Offset	0 - 100 (Default is 50)	Adjusts the lighting level up or down for any given input level. This field is set to 50. At 50, there is no offset. This can be used to match lighting curves with other equipment in the panel.
Photocell Override		
Key Backlight Cutoff	0% - 100% (Default is 80%)	This parameter configures the point when key backlighting is switched off in bright light. For example, a value of 70% means the key backlight will be off at photocell source input levels above 70%.
Photocell Transition	5 - 50 (Default is 25)	This parameter sets the lighting bus input level where the lighting bus input will be ignored and the photocell will be used to control the unit display backlight. The photocell transition is a percentage of the maximum lighting bus input level.

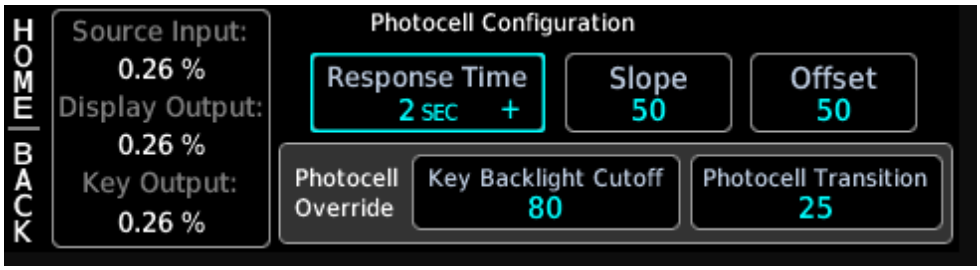

Figure 6-14 Photocell Configuration Page

Lighting Bus Configuration

Table 6-7 Lighting Bus Configuration Selections

Selection	Setting	Description
Response Time	2 (Default) - 7 seconds	Sets the speed with which the brightness responds to the input level (bus voltage or ambient light) changes. The higher the number the slower the display responds.
Slope	0 - 100 (Default is 50)	Sets the sensitivity the brightness of the display has to changes in the input level. The higher the number, the brighter the display for a given increase in the input level.
Offset	0 - 100 (Default is 50)	Adjusts the lighting level up or down for any given input level. This field is set to 50. At 50, there is no offset. This can be used to match lighting curves with other equipment in the panel.
Lighting Bus Input	14V DC	Select the lighting bus source voltage.
	28V DC (Default)	
	5V DC	
	5V AC	

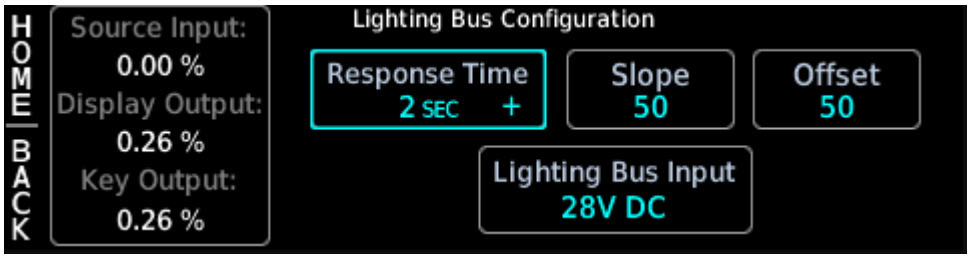

Figure 6-15 Lighting Bus Configuration Page

Reset to Defaults

Selecting **Reset to Defaults** displays the prompt to acknowledge the resetting of lighting settings to default values.

Table 6-8 Reset to Default Selections

Selection	Description
Reset	Resets all lighting settings to default values.
Cancel	Exits the prompt and keeps the current lighting settings.

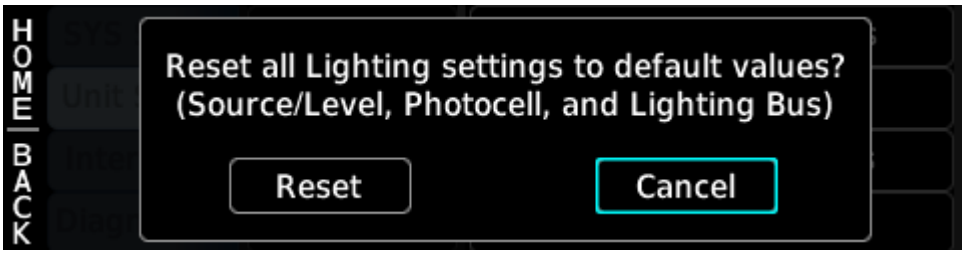

Figure 6-16 Reset to Defaults Page

COM Options

Table 6-9 COM Options Selections

Selection	Setting	Description
RX Squelch Pilot Control	Green Bar	Allows the pilot to adjust the squelch.
	No Green Bar	Uses installer-configured settings for squelch control.
COM Sidetone Pilot Control	Green Bar	Allows the pilot to adjust COM sidetone offset and provides an option to link COM sidetone to COM volume.
	No Green Bar	Uses installer-configured settings for COM sidetone only.
COM Sidetone Source	External (Default)	The COM sidetone audio the pilot hears is the filtered audio being sent to the transmitter.
	Internal	The COM sidetone audio the pilot hears is the audio signal from the headset microphone before it is filtered for transmission.

Figure 6-17 COM Options Page

COM Levels

Table 6-10 COM Levels Selections

Selection	Setting	Description
RX Squelch	0 - 100 (Default is 50)	Refer to table 6-11.
Carrier Squelch	0 - 100 (Default is 43)	Refer to table 6-11.
COM Sidetone Volume	0 - 100 (Default is 50	Adjusts pilot/copilot microphone volume sent to headset (sidetone) during COM transmit.
TX MIC 1 Gain	0 - 10 (Default is 4)	Adjusts the headset microphone #1 input volume transmitted via COM radio.
TX MIC 2 Gain	0 - 10 (Default is 4)	Adjusts the headset microphone #2 input volume transmitted via COM radio.
Reset to Defaults	Yes	Resets squelch, sidetone volume, and TX MIC gain settings to default values.
	No	Exits the prompt and keeps the current settings.

Figure 6-18 COM Levels Page

COM Squelch Functionality

RX squelch silences the received audio when there is no signal detected above a specific power threshold.
RX Squelch is the primary squelch and functions by calculating the ratio of the signal power to the background noise power then compares it to the set threshold. If other aircraft equipment generates noise that consists of pure tones, those tones may be interpreted as signals and used for the calculation. As a result, the squelch breaks when the corresponding channel is selected. In this case, increase the RX squelch percentage or isolate the noise source until the squelch breaks no longer occur.

Carrier Squelch is the secondary squelch and functions by calculating the signal power only and comparing it to the set threshold. If other aircraft equipment is generating noise of a more random nature (wideband), the combined power may cause squelch breaks on many channels. In this case, increase the carrier squelch percentage or isolate the noise source until the squelch breaks no longer occur.

COM RX Squelch

NOTE
The COM RX Squelch settings allows adjustment of the noise signal strength required to break squelch for the COM receiver.

The COM RX Squelch setting configures the RX squelch for all frequencies. The default setting is 50%. 0% is the most sensitive (i.e., the weakest signal level necessary to break squelch). Decreasing the value will allow the squelch to be broken with low signal levels. Increasing the value will require higher signal levels to break squelch.

Table 6-11 contains the approximate levels when the auto squelch opens for various COM RX squelch settings. Installations of GTRs/GNCs will generally use a COM RX squelch setting of 50 or higher.

Table 6-11 COM RX Auto Squelch Settings

COM RX Squelch Setting (%) [1]	RX Squelch Open Approximation (dBm)
0	-107
25	-103.5
50 (Default)	-100
75	-96.5
100	-93

[1] The COM RX squelch range (0-100) is a linear response.

COM Carrier Squelch

NOTE
COM carrier squelch settings allow adjustment of the carrier signal strength required to break squelch for the COM receiver.

The COM carrier squelch level adjustment reduces the sensitivity of the COM receiver. Elevated, ambient RF interference levels in certain flight environments, such as low-flying rotorcraft operating over metropolitan areas or aircraft with equipment installed that interferes with the COM radio, may require adjustment of the COM carrier squelch to reduce undesired squelch breaks.

Table 6-12 COM Carrier Squelch Settings

COM RX Squelch Setting (%) [1]	RX Squelch Open Approximation (dBm)
0	-93
25	-89.5
43 (Default)	-87
50	-86
75	82.5
100	-79

[1] The COM Carrier range (0-100) is a linear response.

6.4.3 Interfaces

Interfaces include:

- RS-232
- HSDB (Ethernet)
- CAN Bus
- Discrete In

RS-232

Table 6-13 RS-232 Page Selections

Selection	Setting	Description
Format	None	No format selected.
	Aviation	Serial port will receive "RS-232 Aviation" format input data, as defined in section 8.1 There is no serial data output from the GTR with this selection.
	NMEA 1	Serial data "RS-232 NMEA" input/output as defined in section 8.2 (for example, with G500/G600, GPSMap, Aera Series, XL Series, or G3X Touch).
Emulate GTR 225 [1]	Enable/Disable	When enabled, supports compatibility with G3X Touch software v9.40 and older.

[1] Available only when RS-232 format is set to "NMEA 1."

Figure 6-19 RS-232 Page

HSDB

HSDB (Ethernet) Settings

NOTE

Refer to the LRU installation manual for compatibility information. Visit Garmin's Dealer Resource Center and search by product name.

Table 6-14 HSDB Setting Selections

Selection	Setting	Description
GPS Navigator	Present	Configure if a GPS navigator such as GPS 175 or GTN Xi is present on the HSDB (Ethernet) network.
	Not Present	
GDU	Present	Configure if a GDU such as G500 TXi is present on the HSDB (Ethernet) network.
	Not Present	
GI 275	Present	Configure if a GI 275 is present on the HSDB (Ethernet) network.
	Not Present	

Figure 6-20 HSDB Settings Page

CAN Bus

CAN Bus Settings

Tap **Present** if a GDU is installed via CAN Bus.

Figure 6-21 CAN Bus Settings Page

Discrete In

NOTE
Discrete 5 is available only on the GTR 205x.

Table 6-15 Discrete In Selections

Selection	Description
Discrete Off	No discrete selected.
COM Remote Transfer	Used to flip-flop between active and standby COM frequencies. It may also be used tune the emergency COM frequency 121.500MHz.
COM Remote Transfer (Lockout) (GTR 205xR)	Used to swap active and standby COM frequencies.
Hold for Lockout (GTR 205xR)	Used to switch to lockout mode.
COM Remote Tune Up	May be used to scroll up through the list of User COM frequencies.
COM Remote Tune Down	May be used to scroll down through the list of User COM frequencies
COM Standby Monitor	Toggles COM standby monitor functions.
TX Interlock In	Desensitizes the receiver of the COM radio.
Pilot ICS Key	Activates the pilot's microphone for the ICS.
Copilot ICS Key	Activates the copilot's microphone for the ICS.
Passenger ICS Key	Activates the passenger’s microphone for the ICS.
COM Playback	Plays the most recent COM recording.
COM MIC Swap	Swaps the active COM radio (Dual-COM only).

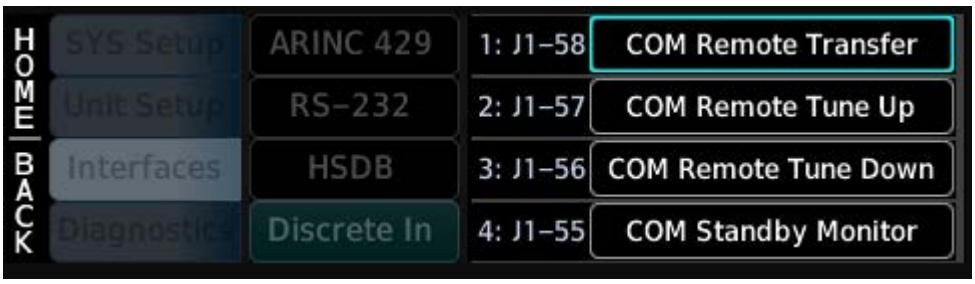

Figure 6-22 Discrete In Selections

6.4.4 SD Save

NOTE
SD Save option is only visible if a SD Card is installed.

SD Save > SD Save > Save Config and Logs to SD transfers configuration information and maintenance logs to an SD card.

Saving to an SD card allows information to display on a PC, emailed, or printed. The saved information includes:

- Printable summary of all configuration settings (HTML)
- Printable maintenance log
- Error log

Figure 6-23 SD Save Pages

On the SD card, saved files are found in the "GTRGNC" folder, located in the folder named with the aircraft's tail number. For example "N123456/GTRGNC."

6.4.5 Test

Audio

Test > Audio > View Headset Test Page displays the Headset Test page.

Set "Test Tone" to the desired channel to hear audio tone test through the headset.

Headset short status indication:

- Green: No Short
- Red: Short

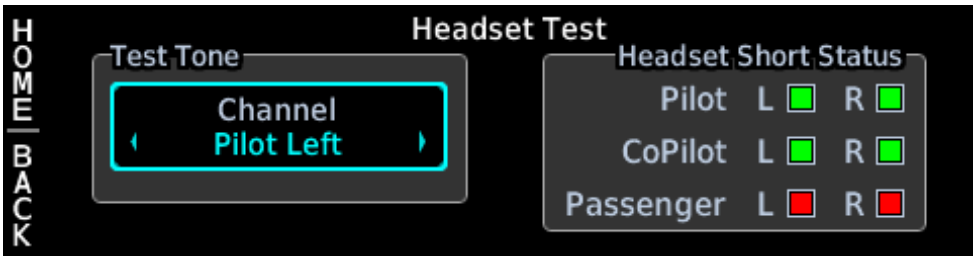

Figure 6-24 Headset Test Page

6.4.6 Diagnostics

Table 6-16 Diagnostics Selections

Selection	Description
Digital	Allows access to view RS-232 inputs, the status of HSDB (Ethernet), and CAN Bus.
Discrete	Allows access to view the function and state of discrete inputs.
Analog In	Displays Analog In items.
Power Stats	Displays total power ups and operating hours.
Temps	Displays temperature of main board, LED board, and COM transmitter.
Clear/Delete	Allows the clearing of the maintenance log, configuration settings, and deleting the database.

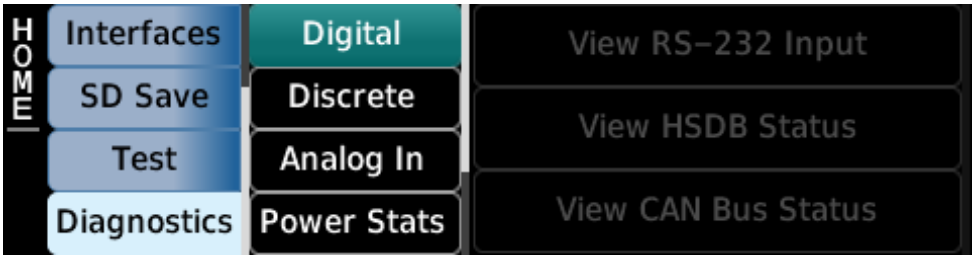

Figure 6-25 Diagnostics Page

Digital

View RS-232 Input

Diagnostics > Digital > View RS-232 Input displays the RS-232 data stream. Select Pause to stop the stream. To clear the information, select Clear Log.

Figure 6-26 RS-232 Diagnostic Page

View HSDB (Ethernet) Status

Diagnostics > Digital > View HSDB (Ethernet) Status displays the status of the Ethernet Port.

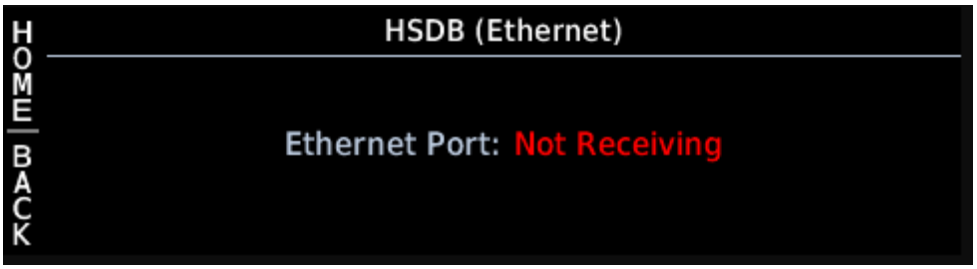

Figure 6-27 HSDB (Ethernet) Diagnostic Page

View CAN Bus Status

Diagnostics > Digital > View CAN Bus Status displays the status of the network bus.

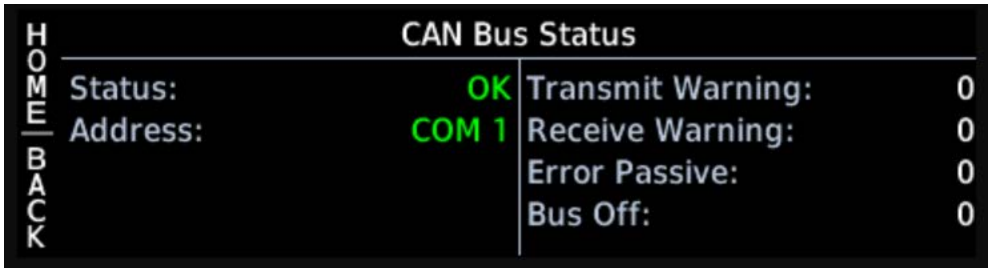

Figure 6-28 CAN Bus Diagnostic Page

Discrete

Discrete In

Diagnostics > Discrete > View Discrete Inputs displays the status of discrete inputs.

Figure 6-29 Discrete In Page

Discrete Out

Diagnostics > Discrete > View Discrete Outputs displays the status of discrete outputs.

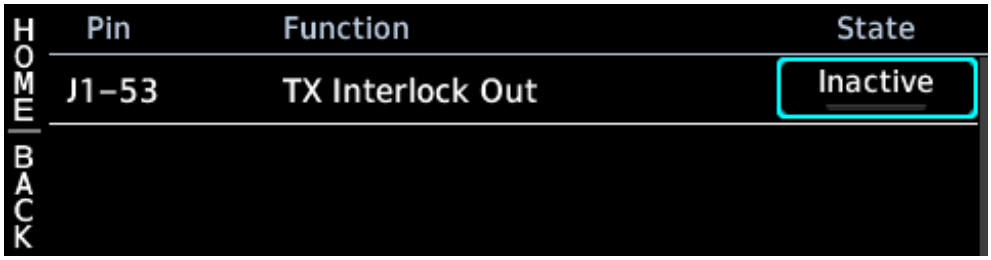

Figure 6-30 Discrete Out Page

Analog In

Diagnostics > Analog In displays the bus setting and input voltage.

Figure 6-31 Analog In Pages

Power Stats

Diagnostics > Power Stats displays the number of Total Power-ups and Operating Hours.

Figure 6-32 Power Stats Page

Temps

Diagnostics > Temps displays the temperatures of Main Board, LED board, and COM Transmitter.

Figure 6-33 Temps Page

Clear/Delete

Diagnostics > Clear/Delete clears the maintenance log, configuration settings, and delete databases.

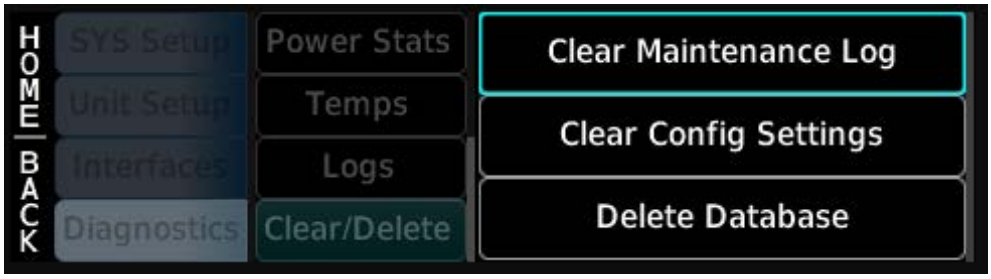

Figure 6-34 Clear/Delete Pages

Selecting Clear Maintenance Log prompts a warning prior to deleting. Select Yes or No to proceed.

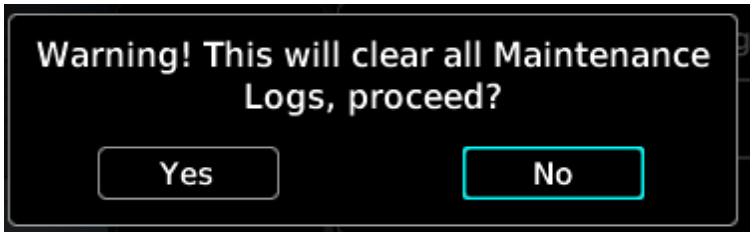

Figure 6-35 Maintenance Log Warning

"Clear Complete" prompt displays when logs are cleared.

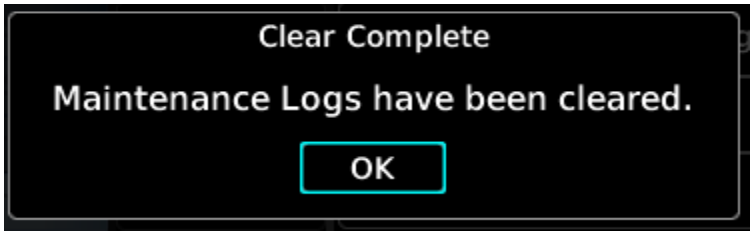

Figure 6-36 Clear Complete Prompt

Selecting Clear Config Settings prompts a warning. Select Yes or No to proceed.

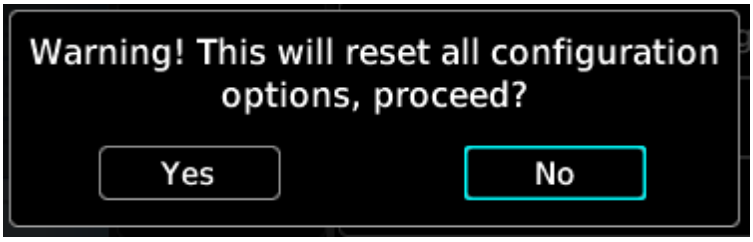

Figure 6-37 Configuration Options Warning

If Yes is selected, a unit restart is necessary.

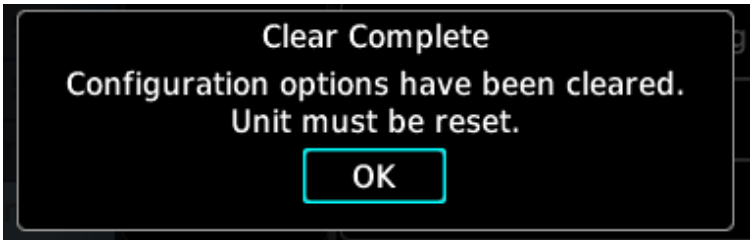

Figure 6-38 Configuration Options Reset

Selecting Delete Database prompts a warning. Select Yes or No to proceed.

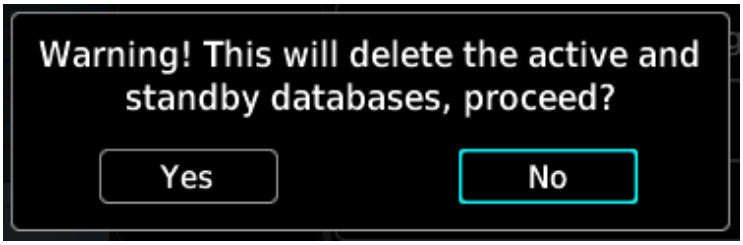

Figure 6-39 Warning of Deleting Databases

6.5 Ground Checks (Configuration Mode)

6.5.1 Lighting Bus Interface Check

CAUTION

WHEN 14 VDC OR 28 VDC LIGHTING BUSES ARE CONNECTED TO THE GTR 205x, CONNECTION OF THE AIRCRAFT LIGHTING BUS TO THE INCORRECT INPUT PINS CAN CAUSE DAMAGE TO THE GTR 205x. ALWAYS START THIS TEST WITH THE DIMMING BUS AT THE LOWEST SETTING, AND SLOWLY INCREASE THE BRIGHTNESS. IF THE BRIGHTNESS LEVEL ON THE GTR 205x DISPLAY DOES NOT INCREASE AS THE LIGHTING IS INCREASED IN BRIGHTNESS, VERIFY THAT THE WIRING IS CORRECT BEFORE PROCEEDING.

The display and bezel key backlighting on the GTR tracks an external lighting/dimmer bus input and uses it to vary the display and bezel key backlight levels accordingly. This check verifies the interface.

1. Ensure the lighting bus is set to its minimum setting.
2. Slowly vary the lighting bus level that is connected to the GTR.
3. Verify the display brightness tracks the lighting bus setting.
4. Continue to maximum brightness and verify operation.

6.6 Ground Checks (Normal Mode)

6.6.1 Discrete Input Checkout

Table 6-17 Discrete Input Pins

PIN NAME	DESCRIPTION
COM REMOTE TRANSFER*	Flip-flops the active and standby COM frequencies.
COM REMOTE TUNE UP*	Scrolls up through the preset COM frequencies in the standby frequency field.
COM REMOTE TUNE DOWN*	Scrolls down through the preset COM frequencies in the standby frequency field.
COM STANDBY MONITOR*	Activates and deactivates the standby COM monitor.
TX INTERLOCK	Desensitizes the receiver of the COM radio.
PILOT ICS KEY	Activates the pilot's microphone for the ICS.
COPILOT ICS KEY	Activates the copilot's microphone for the ICS.

6.6.2 VHF COM

Antenna Check

If desired, the antenna VSWR can be checked using an inline wattmeter in the antenna coaxial using frequencies near both ends of the band. The VSWR should be less than 2:1. A VSWR of 2:1 will cause a drop in output power of approximately 12%.

Receiver/Transmitter Check

1. Tune the unit to a local VHF frequency.
2. Verify the receiver output produces a clear and understandable audio output.
3. Verify the transmitter functions properly by contacting another station and getting a report of reliable communications.

6.6.3 Database Check

NOTE
Databases are optional on the unit and may not be current.

Check the frequency database to ensure it is current.

1. Cycle power on the GTR and let the start-up sequence complete.
2. Press MENU.
3. Turn the outer knob to “System.”
4. Turn the inner knob to “Database.”
5. Press knob.
6. Verify the frequency database date has not lapsed.

6.6.4 Serial Interface Checks

The interfaces to RS-232 equipment such as the GTN 6XX/7XX or GNS 400W/500W series GPS sources should be checked as follows.

1. Operate the connected GPS source and the GTR in normal mode.
2. Ensure the aircraft has a clear view of the sky for this check. This check should not be performed in a hangar.
3. Verify the connected GPS source has a valid GPS satellite fix.
4. Press FIND.
5. Turn the outer knob to NEAREST APT.
6. Verify the wiring between the GPS source and the GTR if the unit displays “No GPS Position.”

6.6.5 Fail-safe Audio Mode

NOTE
Use an actual mono headset, not a stereo headset with a mono/stereo switch.

The test ensures proper wiring, even if a stereo jack is provided in the installation. Wiring the left channel (tip contact) and right channel (ring contact) backward causes the fail-safe mode not to function with mono headsets. This guarantees the condition of the right channel (ring terminal) shorting to the return (sleeve terminal) by the headset plug. During power-on operation, this short will not damage the GTR.

1. Remove power from the unit.
2. Connect a mono headset to the pilot's headset output jack and pilot's mic jack.
3. Verify the AUX 1 input can be heard in the pilot's headset.
4. Apply power to the unit.

6.7 Flight Checks

After the installation is complete, a flight check is recommended to ensure satisfactory performance.

6.7.1 COM Flight Check

To check the communications transceiver, maintain an appropriate altitude and contact a ground station facility at a range of at least 50 nautical miles.

1. Contact a ground station in close proximity.
2. Press the COM volume knob to select manual squelch.
3. Listen for any unusual electrical noise, which would increase the squelch threshold.
4. If possible, verify the communications capability on both the high, low, and mid bands of the VHF COM band. It may be required by the governing regulatory agency to verify operation of the COM transmitter and receiver at the extents of a ground facility's service volume (e.g., FAA AC 23-8A).

6.8 Software Loading

The unit comes pre-loaded with software. It is recommended software from a current GTR Downloadable Software microSD Card, P/N 006-B4769-XX, be loaded into the unit. Visit Garmin's website and search by product name. For dual installations the software loading procedures below must be carried out on each unit. Refer to section 6.4 for instructions pertaining to entering configuration mode.

1. Power off the unit with power knob.
2. Remove the database SD card.
3. Insert the correct loader card into the SD card slot.
4. Restore power to the unit. The unit should power on in configuration mode.
5. Select **Sys Setup** > **SW Upload** to display the available software updates. The page displays the version installed on the unit and version installed on the loader card.
6. Select **Update**.
7. Select **OK**.
8. Power off the unit.
9. Remove the software loader card.
10. Reinsert the database card into the SD card slot.

Figure 6-40 Software Upload Page

6.9 Screenshots

NOTE

To save screenshots, a microSD card in the FAT32 format with a capacity between 8 GB and 32 GB is necessary.

Images are automatically saved to a folder named "Print" in the microSD card root directory. Eject the microSD card from the unit to view images on a computer.

To save images to microSD card:

1. Insert microSD card into slot.
2. Go to page of interest.
3. Push and hold MON.
4. Push and release to top soft key.

When the screenshot is successful, a camera icon briefly displays in the annunciator bar.

Figure 6-41 Screenshots

7 Continued Airworthiness

Other than for regulatory checks, maintenance of the GTR 205x/GTR 205xR is “on condition” only. Periodic maintenance of the GTR 205x/GTR 205xR is not required. Instructions for Continued Airworthiness are not required for this product under 14 CFR Part 21 since the GTR 205x/GTR 205xR has received no FAA approval or endorsement.

8 Data Format

8.1 RS-232 Aviation Format 8-2
8.1.1 Electrical Interface 8-2
8.1.2 General Aviation Input Format 8-2
8.1.3 Aviation Input Sentence Type 1 8-2
8.1.4 Aviation Output Sentence Type 2 (Reference Only) 8-4
8.2 RS-232 NMEA Data Format 8-6
8.2.1 Electrical Interface 8-6
8.2.2 Message Formats 8-6
8.2.3 Message Output Rate 8-7
8.2.4 Message Definitions 8-7

8.1 RS-232 Aviation Format

8.1.1 Electrical Interface

I/O signals are compatible with RS-232C. Data generates at 9600 baud with a word length of 8 bits, one stop bit, and no parity.

8.1.2 General Aviation Input Format

The GTR RS-232 data has the following general format.

Table 8-1 General Aviation Input Format

CHARACTER	DEFINITION
STX	ASCII start-of-text character (02 hex)
t1s	Type 1 sentences
t2s	One or more type 2 sentences [Optional, Ignored]
ETX	ASCII end-of-text character (03 hex)

8.1.3 Aviation Input Sentence Type 1

The Type 1 input sentences have the following general format.

Table 8-2 Aviation Input Sentence Type 1

CHARACTER	DEFINITION
id	item designator (single ASCII alphabetic character)
dddd	item data (1 to 10 printable ASCII characters)
CR	ASCII carriage return character (0D hex)
LF	ASCII line feed character (0A hex) [1]

[1] The line feed character is not output if the RS-232 port is configured as “Aviation Output 2” on the sending unit.

The GTR expects to receive a Type 1 sentence approximately once every second.

The track, desired track and bearing to waypoint angles, and the magnetic variation are output according to the current mode of the GTN (automatic magnetic heading, magnetic variation computed at last known position; true heading, magnetic variation of E00.0°; or user-defined magnetic heading, magnetic variation as entered by user).

Table 8-3 describes the Type 1 input sentence item designator (id) and item data (dddd) fields. If data for these sentences is invalid or unavailable, dashes ("-") are used to fill in all non-blank character positions.

Table 8-3 Aviation Input Sentence Format

IDENT (1 BYTE)	DATA (10 BYTES)										DESCRIPTION
	1	2	3	4	5	6	7	8	9	0	
z (Ignored)	a	a	a	a	a						Current GPS altitude in feet *
A	s		d	d		m	m	h	h		Current latitude, where: s N (north) or S (south) dd degrees mm minutes hh hundredths of minutes
B	s		d	d	d		m	m	h	h	Current longitude, where: s E (east) or W (west) ddd degrees mm minutes hh hundredths of minutes
C (Ignored)	d	d	d								Track in whole degrees
D (Ignored)	s	s	s								Ground speed in knots
E (Ignored)	d	d	d	d	d						Distance to waypoint in tenths of nautical miles
G (Ignored)	s	n	n	n	n						Cross track error, where: s L (left) or R (right) of course nnnn error in hundredths of nautical miles
I (Ignored)	d	d	d	d							Desired track in tenths of degrees
K (Ignored)	c	c	c	c	c						Active waypoint identifier (will be blank filled on right if less than 5 characters in identifier)
L (Ignored)	d	d	d	d							Bearing to active waypoint in tenths of degrees
Q	s	d	d	d							Magnetic variation, where: s E (east) or W (west) ddd tenths of degrees
S (Ignored)	-	-	-	-	f						NAV valid flag status, where: f - N (NAV flagged) or - (NAV valid)
T (Ignored)	-	-	-	-	-	-	-	-	-		Warnings status, only data transmitted are dashes (-). Used to indicate end of Type 1 sentences.
l (lower case Lima) (Ignored)	d	d	d	d	d	d					Distance to destination waypoint in tenths of nautical miles.

8.1.4 Aviation Output Sentence Type 2 (Reference Only)

The GTR Type 2 aviation output sentence has the following general format.

Table 8-4 Aviation Output Sentence Type 2

CHARACTER	DESCRIPTION
id	item designator (3 ASCII characters)
seq	sequence number (1 binary byte)
wpt	waypoint identifier (5 ASCII characters)
lat	waypoint latitude (3 binary bytes)
lon	waypoint longitude (4 binary bytes)
mvar	magnetic variation at waypoint (2 binary bytes)
CR	ASCII carriage return character (0D hex)
LF	ASCII line feed character (0A hex)

Each waypoint in the route being navigated by the interfacing equipment has a Type 2 sentence output by the interfacing navigation equipment approximately once every second.

If no route is being navigated by the interfacing navigation equipment (i.e., the active route is empty), the following Type 2 sentence is output approximately once every second.

Table 8-5 Aviation Output Sentence Type 2 - No Route

CHARACTER	DESCRIPTION
id	item designator (3 ASCII characters; route sequence number is “01”)
seq	sequence number (1 binary byte; last waypoint flag is set; route sequence number is 1)
CR	ASCII carriage return character (0D hex)
LF	ASCII line feed character (0A hex)

Table 8-6 describes the Type 2 aviation output sentence item designator (id), sequence number (seq), waypoint identifier (wpt), waypoint latitude (lat), waypoint longitude (lon), and magnetic variation at waypoint (mvar) fields.

Table 8-6 Type 2 Aviation Output Sentence Format

FIELD	BYTE	FORMAT								DESCRIPTION
		7	6	5	4	3	2	1	0	
id	1 2-3									ASCII character "w" (77 hex) Two ASCII numeric characters representing route sequence number of waypoint (01 to 31)
seq	1	x	l	a	n	n	n	n	n	x undefined l 1 if last waypoint in route a 1 if active to waypoint nnnnn route sequence number of waypoint (unsigned binary)
wpt	1-5									Destination waypoint identifier (will be blank filled on right if less than 5 characters in identifier)
lat	1	s	d	d	d	d	d	d	d	s 0 (north) or 1 (south) dddddddd latitude degrees (unsigned binary) xx undefined mmmmmm latitude minutes (unsigned binary) x undefined hhhhhhh hundredths of latitude minutes (unsigned binary)
	2	x	x	m	m	m	m	m	m	
	3	x	h	h	h	h	h	h	h	
lon	1	s	x	x	x	x	x	x	x	s 0 (east) or 1 (west) xxxxxxx undefined dddddddd longitude degrees (unsigned binary) xx undefined mmmmmm latitude minutes (unsigned binary) x undefined hhhhhhh hundredths of latitude minutes (unsigned binary)
	2	d	d	d	d	d	d	d	d	
	3	x	x	m	m	m	m	m	m	
	4	x	h	h	h	h	h	h	h	
mvar	1-2									Two's complement binary in 16ths of degrees. Easterly variation is positive. MSB output first.

8.2 RS-232 NMEA Data Format

8.2.1 Electrical Interface

I/O signals are compatible with RS-232C. Data is generated at 9600 baud with a word length of 8 bits, one stop bit, and no parity.

The data format for the serial communication is:

Baud rate	9600
Data bits	8
Stop bits	1
Parity	None

8.2.2 Message Formats

All messages conform to the NMEA 0183 proprietary message format as follows. All characters will be standard ASCII characters. No binary data characters are used.

Table 8-7 Message Formats

CHARACTER	DEFINITION
"$"	Start of message character, ASCII "$" (024h).
"P"	Proprietary message identifier.
"GRM"	Garmin company identifier.
c	Message class identifier; Identifies a message as a COM message. The GTR uses "C".
nn	Message identifier, two-digit number in ASCII characters.
d.....d	Message data characters defined for each message.
chksum	Message checksum, including message identifier (nn) through data characters (d.....d). The two-digit checksum is generated by adding all values of valid characters together, ignoring carry (if any). This value is converted into two encoded hex characters (30h-3Fh). [1]
<CR>	ASCII carriage return (0Dh).
<LF>	ASCII line feed (0Ah).

The maximum message length, including the start of message character ("$") and the end of message <CR><LF> sequence, is 100 bytes.

[1] Encoded hex: each character consists of 4 bits of data placed in the low order nibble +30h. For example, the 8-bit value 5Fh would be encoded as two characters with values of 35h and 3Fh, which map to the ASCII characters "5" and "?", respectively.

8.2.3 Message Output Rate

The GTR will output the following messages at the specified rates.

Table 8-8 Message Definitions

MESSAGE	RATE
COM Transceiver Status	1Hz (low rate)

8.2.4 Message Definitions

Frequency Types

Table 8-9 Frequency Type

CHARACTER	DESCRIPTION
0	Tower
1	Ground
2	Automatic Terminal Information Service or ATIS
3	Air Traffic Frequency
4	Approach
5	Arrival
6	Automatic Weather Observing Station
7	Clearance/Delivery
8	Common Traffic Advisory Frequency
9	Departure
:	Flight Service Station
;	Remote Flight Service Station
<	Unicom
=	Mandatory Frequency
>	No type specified
?	Undefined
@	Center
A	Automated Surface Observing Station
B	Class B
C	Class C
D	Radio
E	Enroute
F	Enroute Flight Advisory Service or Flight Watch

CHARACTER	DESCRIPTION
G	Gate
H	Helicopter
I	Information
J	Weather
K	Terminal
L	Pilot controlled lighting
M	Multicom
N	Radar
O	Operations
P	Ramp
Q	Reserved - Undefined

Input Messages

Request Data Output

NOTE

The GTR flags the specified message for output when it receives the request. There will be a lag between the time the message is flagged for output and the time it is actually output. If another request for the same message is received in this period, then the previous request will be lost. The amount of lag depends on the number of messages that are consecutively flagged for output.

NOTE

Use of unsupported output identifiers will not generate a Communication Error message.

This input command is used to request an output message to be sent by the GTR. Message data may be specified.

Table 8-10 Message Format (GTR COM Requests)

CHARACTER	DEFINITION
"C"	Message class. This is a GTR COM request.
"06"	Message identifier.
ii	Output identifier of requested message, two ASCII characters. 00 = Request Legacy COM Reset Status from list of output identifiers. 02 = Request COM Audio Volume 03 = Request COM Software Version 13 = Request GTR Status 14 = Request Unit Display Information.
d	Message sub-id; set to (ASCII) 1 for Request COM Audio Volume, 0 otherwise.
"00"	Reserved.
MESSAGE EXAMPLE	
$PGRMC0613000<chksm><CR><LF> Request the GTR to send the current COM status.	

Set Active COM Frequency and Transceiver Function

NOTE
The GTR will check input frequencies for validity. An RS-232 serial error message output will be generated if the frequency is invalid.

NOTE
The GTR will generate a COM data error message if this message is received while transmitting on the active COM frequency.

This message is used to set the Active COM frequency as well as the COM transceiver function.

Table 8-11 Active COM Frequency and Transceiver Message Format

CHARACTER	DEFINITION
"C"	Message class. This is a GTR COM message.
"00"	Message identifier.
mk	Active COM Frequency: m = desired frequency in MHz in hexadecimal, where m = desired frequency - 30h, with desired frequency in range of 118 to 136 MHz. k = desired frequency in kHz, where k = (desired frequency / 25 kHz) + 30h, with desired frequency in range of 000 to 975 kHz in 25 kHz steps.
a	Transceiver function: N = normal, M = monitor, 0 = unchanged.
o	8.33 kHz Offset: (ASCII) 0 = 25 kHz frequency (.000) 1 = first 8.33 kHz channel offset (.005) 2 = second 8.33 kHz channel offset (.010) 3 = third 8.33 kHz channel offset (.015)
MESSAGE EXAMPLE	
$PGRMC00G4N0<chksm><CR><LF> This example command would set the active COM frequency to 119.100 MHz and place the COM radio in Normal receive mode. This is interpreted by noting that the ASCII "G" corresponds with 47h, +30h = 77h, converted to decimal equals 119 for the MHz portion. The kHz portion converts ASCII "4" to 34h, -30h yields 4h, x 25 kHz steps = 100 kHz, with no 8.33 kHz channel offsets.	

Set Standby COM Frequency and Transceiver Function

NOTE
The GTR will check input frequencies for validity. An RS-232 serial error message output will be generated if the frequency is invalid.

This message is used to set the standby COM frequency as well as the COM transceiver function.

Table 8-12 Standby COM Frequency and Transceiver Message Format

CHARACTER	DEFINITION
"C"	Message class. This is a GTR COM message.
"01"	Message identifier.
mk	Standby COM Frequency m = desired frequency in MHz in hexadecimal, where m = desired frequency - 30h, with desired frequency in range of 118 to 136MHz. k = desired frequency in kHz, where k = (desired frequency / 25 kHz) + 30h, with desired frequency in range of 000 to 975 kHz in 25 kHz steps.
a	Transceiver function: N = normal M = monitor 0 = unchanged.
o	8.33 kHz offset: (ASCII) 0 = 25 kHz frequency (.000) 1 = first 8.33 kHz channel offset (.005) 2 = second 8.33 kHz channel offset (.010) 3 = third 8.33 kHz channel offset (.015)
MESSAGE EXAMPLE	
$PGRMC01KFM2<chksm><CR><LF> This example command would set the standby COM frequency to 123.565MHz and place the COM radio in Monitor mode. This is interpreted by noting that the ASCII "K" corresponds with 4Bh, +30h = 7Bh, converted to decimal equals 123 for the MHz portion. The kHz portion converts ASCII "F" to 46h, -30h yields 16h, x25 kHz steps = 550 kHz, add 3 8.33 channels = 565 kHz.	

Set COM Volume Level and Audio Control Parameters

This input is used to set the volume level for the headphone output, and various audio controls parameters.

Table 8-13 COM Level and Audio Control Message Format

CHARACTER	DESCRIPTION
"C"	Message class. This is a GTR COM message.
"02"	Message ident.
n	Data type: (ASCII) 1 = headphone 4 = sidetone level 9 = RF squelch. Note: Only the headphone volume level can be changed using this message. The sidetone and squelch messages will be accepted without error and ignored.
vv	Volume level: 00-FFh; two encoded hex characters (30h-3Fh).
MESSAGE EXAMPLE	
$PGRMC0211=<chksm><CR><LF> Set the headphone output volume to 1Dh out of FFh ("=" = 3Dh, -30h = Dh).	

Select Squelch Override

This input is used to turn the manual squelch on and off.

Table 8-14 Squelch Override Message Format

CHARACTER	DESCRIPTION
"C"	Message class. This is a GTR COM message.
"03"	Message ident.
n	Squelch test: (ASCII) 0 = automatic 1 = manual override (displays "SQ")
MESSAGE EXAMPLE	
$PGRMC030<chksm><CR><LF> Set the squelch to automatic operation.	

Remote Airport Identifier Name

This input adds an airport identifier to a remote airport frequency list.

Table 8-15 Remote Airport Identifier Name Message Format

CHARACTER	DESCRIPTION
"C"	Message class. This is a GTR COM message.
"04"	Message ident.
t	List type "0" through "9."
aaaa	Airport Identifier. Allowable ASCII characters are A-Z, 0-9, and trailing spaces. All four characters can be spaces. Leading spaces and spaces inserted between alphanumeric characters are not allowed.
MESSAGE EXAMPLE	
$PGRMC044K34<sp><chksm><CR><LF> Set the list airport name at index 4 to K34<sp>.	

Remote Airport Frequency Input

This input adds a frequency to a remote airport frequency list.

Table 8-16 Remote Airport Frequency Input Message Format

CHARACTER	DESCRIPTION
"C"	Message class. This is a GTR COM message.
"05"	Message ident.
t	List type "0" through "9."
f	Refer to table 8-9.
mk	Airport COM Frequency: m = desired frequency in MHz in hexadecimal, where m = desired frequency - 30h, with desired frequency in range of 118 to 136 MHz. k = desired frequency in kHz, where k = (desired frequency / 25 kHz) + 30h, with desired frequency in range of 000 to 975 kHz in 25 kHz steps.
o	8.33 kHz offset: (ASCII) (Only applies to GRM messages) 0 = 25 kHz frequency (.000) 1 = first 8.33 kHz channel offset (.005) 2 = second 8.33 kHz channel offset (.010) 3 = third 8.33 kHz channel offset (.015)
MESSAGE EXAMPLE	
$PGRMC054<JP0<chksm><CR><LF> Append 122800 to the end of the airport frequency list at index 4 with a frequency type of UNICOM.	

Set Active COM Frequency with Identifier

This input sets the active COM frequency to the given frequency, along with the transceiver mode, and the text to be displayed with the frequency.

Table 8-17 Active COM Frequency with Identifier Message Format

CHARACTER	DESCRIPTION
"C"	Message class. This is a GTR COM message.
"15"	Message ident.
f	Refer to table 8-9.
mk	Active COM Frequency: m = desired frequency in MHz in hexadecimal, where m = desired frequency - 30h, with desired frequency in range of 118 to 136 MHz. k = desired frequency in kHz, where k = (desired frequency / 25 kHz) + 30h, with desired frequency in range of 000 to 975 kHz in 25 kHz steps.
a	Transceiver function: N = normal M = monitor 0 = unchanged
o	8.33 kHz offset: (ASCII) (Only applies to GRM messages) 0 = 25 kHz frequency (.000) 1 = first 8.33 kHz channel offset (.005) 2 = second 8.33 kHz channel offset (.010) 3 = third 8.33 kHz channel offset (.015)
iiii	Identifier string. Allowable ASCII characters are A-Z, 0-9, and trailing spaces. All four characters can be spaces. Leading spaces and spaces inserted between alphanumeric characters are not allowed.
MESSAGE EXAMPLE	
$PGRMC15F0N0ABC I<chksm><CR><LF> Set the active COM frequency to 118.000 MHz, the transceiver to normal (not monitor) mode, and the displayed text to ABC<sp> along with the Information frequency type.	

Set Standby COM Frequency with Identifier

This input sets the standby COM frequency to the given frequency, along with the transceiver mode, and the text to be displayed with the frequency.

Table 8-18 Standby COM Frequency with Identifier Message Format

CHARACTER	DESCRIPTION
"C"	Message class. This is a GTR COM message.
"16"	Message ident.
f	Refer to table 8-9.
mk	Standby COM Frequency: m = desired frequency in MHz in hexadecimal, where m = desired frequency - 30h, with desired frequency in range of 118 to 136 MHz. k = desired frequency in kHz, where k = (desired frequency / 25 kHz) + 30h, with desired frequency in range of 000 to 975 kHz in 25 kHz steps.
a	Transceiver function: N = normal M = monitor 0 = unchanged
o	8.33 kHz offset: (ASCII) (Only applies to GRM messages) 0 = 25 kHz frequency (.000) 1 = first 8.33 kHz channel offset (.005) 2 = second 8.33 kHz channel offset (.010) 3 = third 8.33 kHz channel offset (.015)
iiii	Identifier string. Allowable ASCII characters are A-Z, 0-9, and trailing spaces. All four characters can be spaces. Leading spaces and spaces inserted between alphanumeric characters are not allowed.
MESSAGE EXAMPLE	
$PGRMC16F0N0ABC I<chksm><CR><LF> Set the standby COM frequency to 118.000 MHz, the transceiver to normal (not monitor) mode, and the displayed text to ABC<sp> along with the Information frequency type.	

Set COM Frequency Lookup Table Entry

This input adds a frequency, identifier, and frequency type to the remote frequency lookup table at the given index.

Table 8-19 Set COM Frequency Lookup Table Entry Message Format

CHARACTER	DESCRIPTION
"C"	Message class. This is a GTR COM message.
"17"	Message ident.
nnn	Frequency index (000 to 299)
f	Refer to table 8-9.
mk	Standby COM Frequency: m = desired frequency in MHz in hexadecimal, where m = desired frequency - 30h, with desired frequency in range of 118 to 136 MHz. k = desired frequency in kHz, where k = (desired frequency / 25 kHz) + 30h, with desired frequency in range of 000 to 975 kHz in 25 kHz steps.
o	8.33 kHz offset: (ASCII) (Only applies to GRM messages) 0 = 25 kHz frequency (.000) 1 = first 8.33 kHz channel offset (.005) 2 = second 8.33 kHz channel offset (.010) 3 = third 8.33 kHz channel offset (.015)
iiii	Identifier string. Allowable ASCII characters are A-Z, 0-9, and trailing spaces. All four characters can be spaces. Leading spaces and spaces inserted between alphanumeric characters are not allowed.
MESSAGE EXAMPLE	
$PGRMC17000F00GHI I<chksm><CR><LF> Set the frequency lookup table entry at index 0 to 118.000 MHz with the GHI<sp> as the identifier string and information as the frequency type.	

Remove COM Frequency Lookup Table Entry

This input removes entries from the COM frequency lookup table starting at the given index for the given number of entries.

Table 8-20 Remove COM Frequency Lookup Table Entry Message Format

CHARACTER	DESCRIPTION
"C"	Message class. This is a GTR COM message.
"18"	Message ident.
nnn	Frequency index (000 to 299)
sss	Number of sequential frequencies to delete (minimum 001 to 300)
MESSAGE EXAMPLE	
$PGRMC18000010<chksm><CR><LF> Delete ten entries from the COM frequency lookup table starting at index 0.	

COM Keypad Input

This input is used to press keys as though the display was on the main COM screen.

Table 8-21 COM Keypad Input Message Format

CHARACTER	DESCRIPTION
"C"	Message class. This is a GTR COM message.
"19"	Message identifier.
p	Key press: F = Flip-Flop key; M = MON key.
MESSAGE EXAMPLE	
$PGRMC19M<chksm><CR><LF> Toggle the standby frequency monitor mode.	

Output Messages

COM Transceiver Status

NOTE

This message is output at a nominal one second rate, or faster whenever the transceiver function or status changes.

This message is used to output the current status of the GTR COM. It will be output at the configured message rate (1 Hz) or whenever the status changes.

Table 8-22 COM Transceiver Status Message Format

CHARACTER	DESCRIPTION
"C"	Message class. This is a GTR COM message.
"01"	Message identifier.
mk	Active frequency: m = MHz, where m = desired MHz frequency - 30h, ranging from 118 to 136 MHz, (i.e. 76h to 88h, A2h); k = (kHz offset / 25 kHz) + 30h, ranging from 000 to 975 kHz in 25 kHz steps.
mk	Standby frequency: m = MHz, where m = desired MHz frequency - 30h, ranging from 118 to 136 MHz, (i.e. 76h to 88h, A2h) k = (kHz offset/25 kHz) + 30h, ranging from 000 to 975 kHz in 25 kHz steps.
a	Transceiver status: I = Intercom (no other status applicable) R = Normal receive M = Monitor receive T = Transmit active S = Stuck mic F = COM failure
s	Squelch setting: (ASCII) 0 = Squelch manual override off, Monitor mode off; 1 = Squelch manual override on, Monitor mode off 2 = Squelch manual override off, Monitor mode on 3 = Squelch manual override on, Monitor mode on
hh	COM channel spacing: (ASCII) 25 = 25 kHz mode; 83 = 8.33 kHz mode.
o	Active frequency 8.33 kHz offset: (ASCII) 0 = 25 kHz frequency (.000) 1 = first 8.33 kHz channel offset (.005) 2 = second 8.33 kHz channel offset (.010) 3 = third 8.33 kHz channel offset (.015).
o	Standby frequency 8.33 kHz offset: (ASCII) 0 = 25 kHz frequency (.000) 1 = first 8.33 kHz channel offset (.005) 2 = second 8.33 kHz channel offset (.010) 3 = third 8.33 kHz channel offset (.015)

CHARACTER	DESCRIPTION
MESSAGE EXAMPLE	
$PGRMC01G4LFR08303<chksm><CR><LF> Active frequency is 119.100MHz, the standby frequency is 124.565MHz, unit is receiving, squelch is automatic, and the unit is in 8.33 kHz mode.	

COM Volume Level

This message is used to output the COM volume level.

Table 8-23 COM Volume Level Message Format

CHARACTER	DESCRIPTION
"C"	Message class. This is a GTR COM message.
"02"	Message identifier.
"1"	Headphone Volume.
vv	Volume level: 00-FFh; use encoded hex (30h-3Fh).
MESSAGE EXAMPLE	
$PGRMC02130<chksm><CR><LF> The headphone volume level is 30h out of FFh.	

COM Software Version

This message is used to output the COM module software version.

Table 8-24 COM Software Version Message Format

CHARACTER	DESCRIPTION
"C"	Message class. This is a GTR COM message.
"03"	Message identifier.
vvvv	Software version in ASCII.
MESSAGE EXAMPLE	
$PGRMC030100<chksm><CR><LF> COM Software version is 01.00.	

GTR COM Status

This message is used to output the GTR COM Status.

Table 8-25 GTR COM Message Format

CHARACTER	DESCRIPTION
"C"	Message class. This is a GTR COM message.
"13"	Message identifier.
a	COM needs service; (ASCII) 0 = OK, 1 = COM transmit capabilities not reliable.
b	COM status; (ASCII) 0 = OK, 1 = COM functions not available.
c	Push-to-Talk key stuck; (ASCII) 0 = OK, 1 = Stuck.
d	Remote Transfer stuck; (ASCII) 0 = OK, 1 = Stuck.
e	Remote Tune Up stuck; (ASCII) 0 = OK, 1 = Stuck.
f	Remote Tune Down stuck; (ASCII) 0 = OK, 1 = Stuck.
g	COM TX Power Limited; (ASCII) 0 = OK, 1 = Transmit power limited.
h	"0" Reserved
MESSAGE EXAMPLE	
$PGRMC1300100000<chksm><CR><LF> GTR is running and ready to accept serial input and Push-to-Talk is stuck on.	

Unit Display Information

This message is used to output information about the GTR display head.

Table 8-26 Unit Display Information Message Format

"C"	Message class. This is a GTR COM message.
"14"	Message identifier.
name	Product name.
","	Delimiter.
pnum	Display product number.
","	Delimiter.
(v)v.vv	Display application software version, including ASCII decimal, with no leading zero for software versions less than 10.00.
MESSAGE EXAMPLE	
$PGRMC14GTR 205,006-B3896-02,2.11<chksm><CR><LF> A GTR 205 with software product number 006-B3896-00, software version 2.20.	

Communications Error

This message is used to indicate a communication error.

Table 8-27 GTR COM Error Message Format

CHARACTER	DESCRIPTION
"C"	Message class. This is a GTR COM message.
"05"	Message identifier.
e	Error code: (ASCII) "0" = input message checksum error. "1" = unknown message. "2" = error or mismatch in message data.
MESSAGE EXAMPLE	
$PGRMC050<chksm><CR><LF> Received a COM message with an invalid checksum.	

Summary of Messages

Table 8-28 Input Message Summary

CLASS	IDENT	DESCRIPTION	RESPONSE
C	00	Set Active COM Frequency and Transceiver Function	COM Transceiver Status
C	01	Set Standby COM Frequency and Transceiver Function	COM Transceiver Status
C	02	Set COM Audio Items	COM Audio Status
C	03	Select Squelch Override	COM Transceiver Status
C	04	Remote Airport Identifier Name	N/A
C	05	Remote Airport Frequency Input	N/A
C	06	Request COM data	Various Messages
C	15	Set Active COM Frequency With Identifier	COM Transceiver Status
C	16	Set Standby COM Frequency With Identifier	COM Transceiver Status
C	17	Set COM Frequency Lookup Table Entry	N/A
C	18	Remove COM Frequency Lookup Table Entries	N/A
C	19	COM Keypad Input	COM Transceiver Status
Notes	Class: "C" = GTR COM message.		

Table 8-29 Output Message Summary

CLASS	IDENT	DESCRIPTION	OUTPUT RATE
C	01	COM Transceiver Status	Status Change / Low
C	02	COM Volume Level	Upon Request / Status Change
C	03	COM Software Version	Upon Request
C	05	COM Communications Error	When Error Detected
C	13	COM Radio Status	At Startup / Upon Request / Status Change
C	14	Unit Display Information	Upon Request

9 Mechanical Drawings

Figure 9-1 GTR 205x Dimensions and Center of Gravity 9-2
Figure 9-2 GTR 205xR Dimensions and Center of Gravity 9-3
Figure 9-3 Rear Connector Layout Detail 9-4
Figure 9-4 Panel Cutout Detail 9-5
Figure 9-5 Mounting Rack Installation 9-6
Figure 9-6 Mounting Rack 9-7

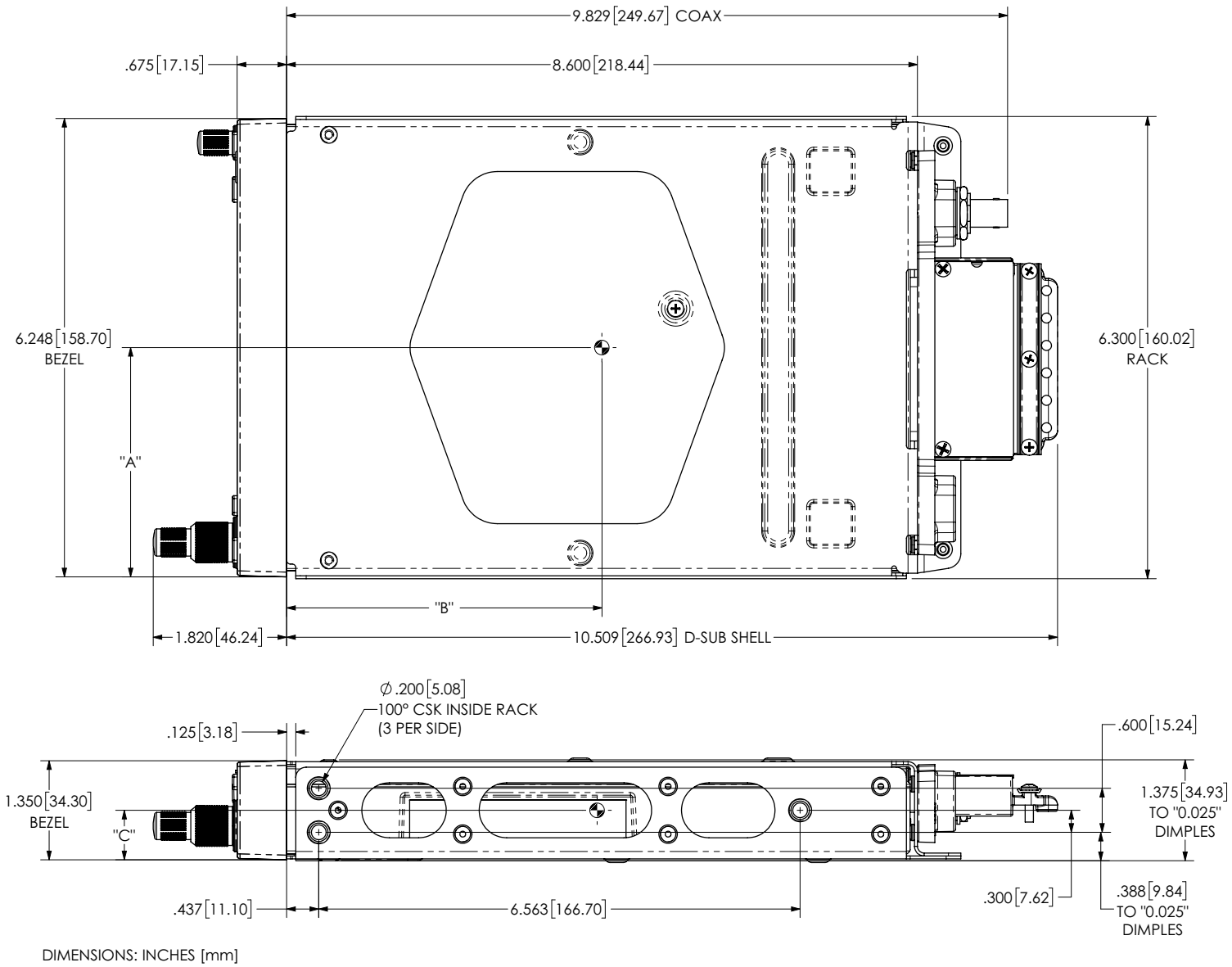

PRODUCT	"A"	"B"	"C"
GTR 205x	3.25 [82.6]	4.47 [113.5]	0.50 [12.7]

Figure 9-1 GTR 205x Dimensions and Center of Gravity

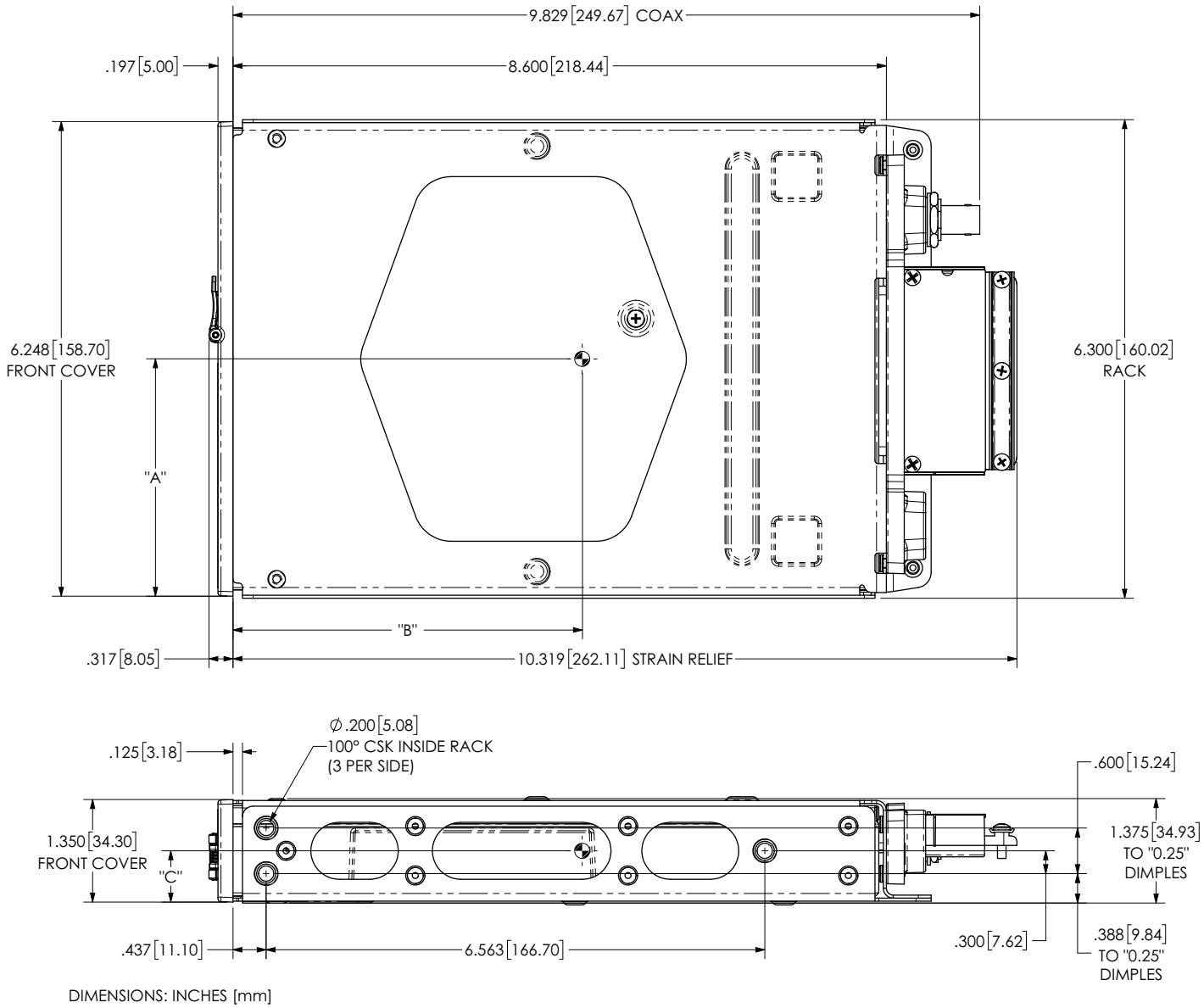

Figure 9-2 GTR 205xR Dimensions and Center of Gravity

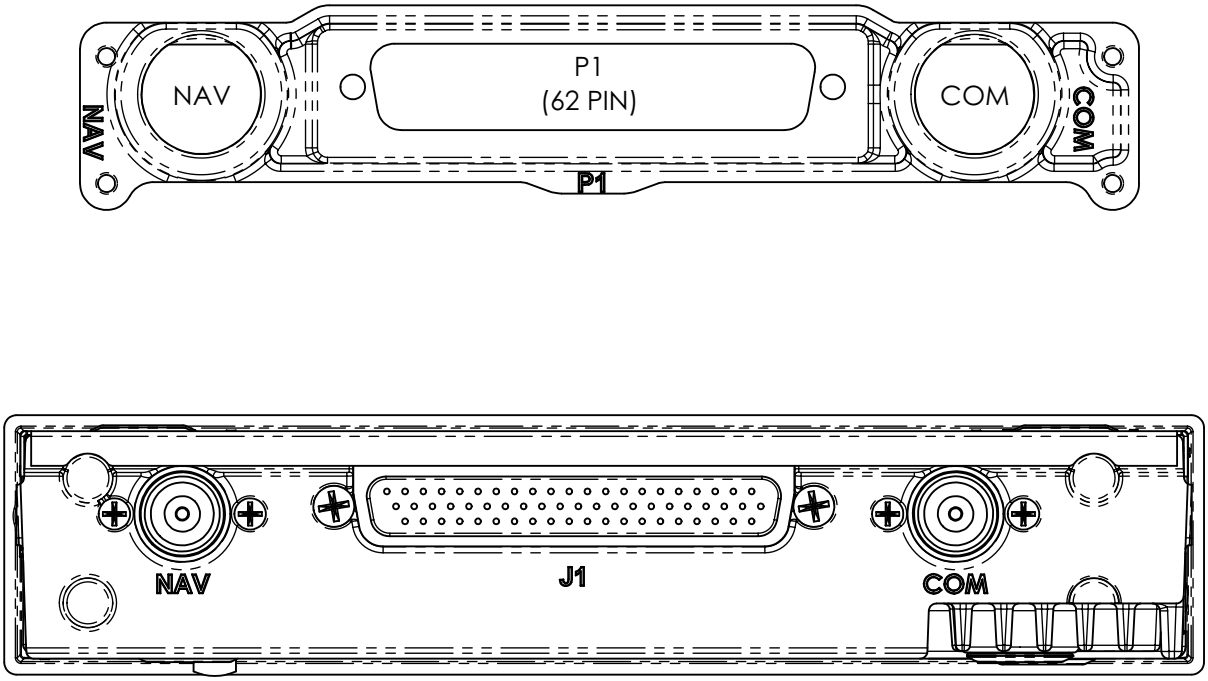

Figure 9-3 Rear Connector Layout Detail

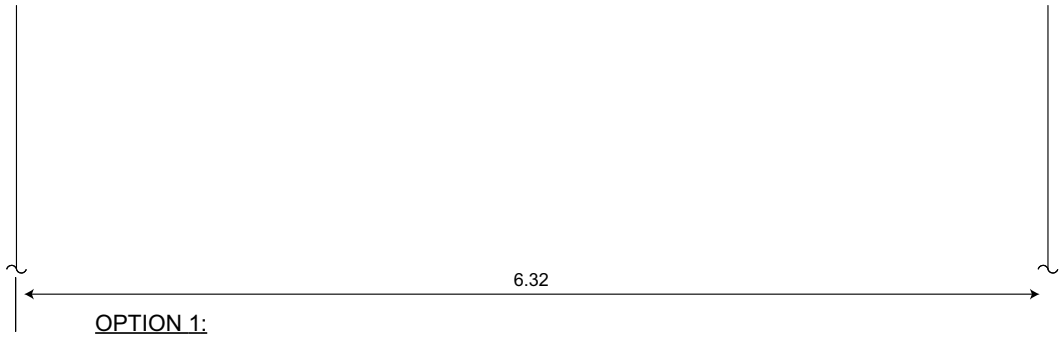

OPTION 1:

STACK CUTOUT (RACK INSTALLED FROM FRONT OF AIRCRAFT PANEL)

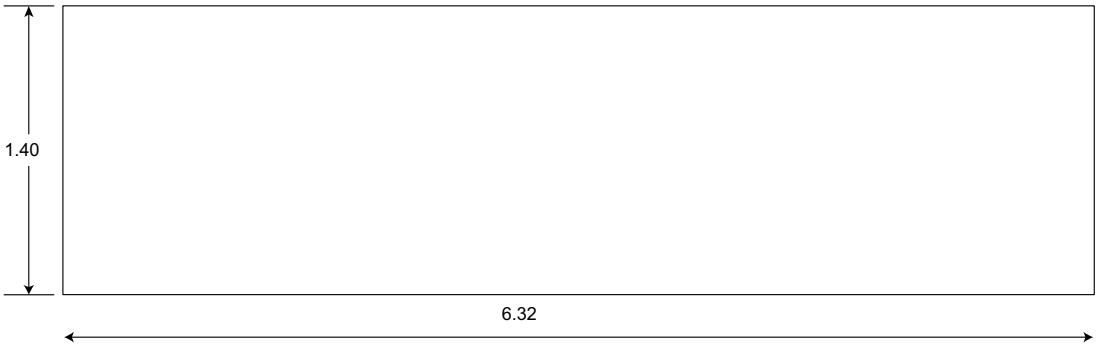

OPTION 2:

RADIO CUTOUT (RACK INSTALLED FROM FRONT OF AIRCRAFT PANEL)

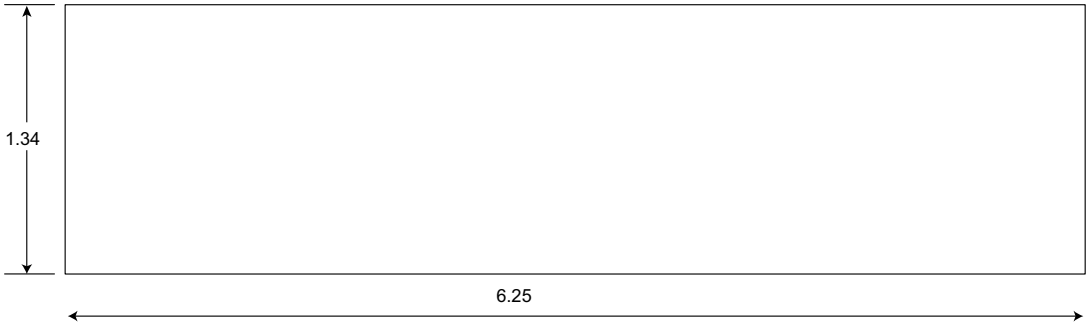

OPTION 3:

RADIO CUTOUT (RACK INSTALLED FROM BACK OF AIRCRAFT PANEL ONLY) MAXIMUM AIRCRAFT PANEL THICKNESS IS .125".

NOTES, ALL OPTIONS:

1. DIMENSIONS ARE IN INCHES.
2. IF THE FRONT LIP OF THE MOUNTING RACK IS BEHIND THE SURFACE OF THE AIRCRAFT INSTRUMENT PANEL, THE UNIT CONNECTORS MAY NOT FULLY ENGAGE.
3. TOLERANCE: ±0.03" .

Figure 9-4 Panel Cutout Detail

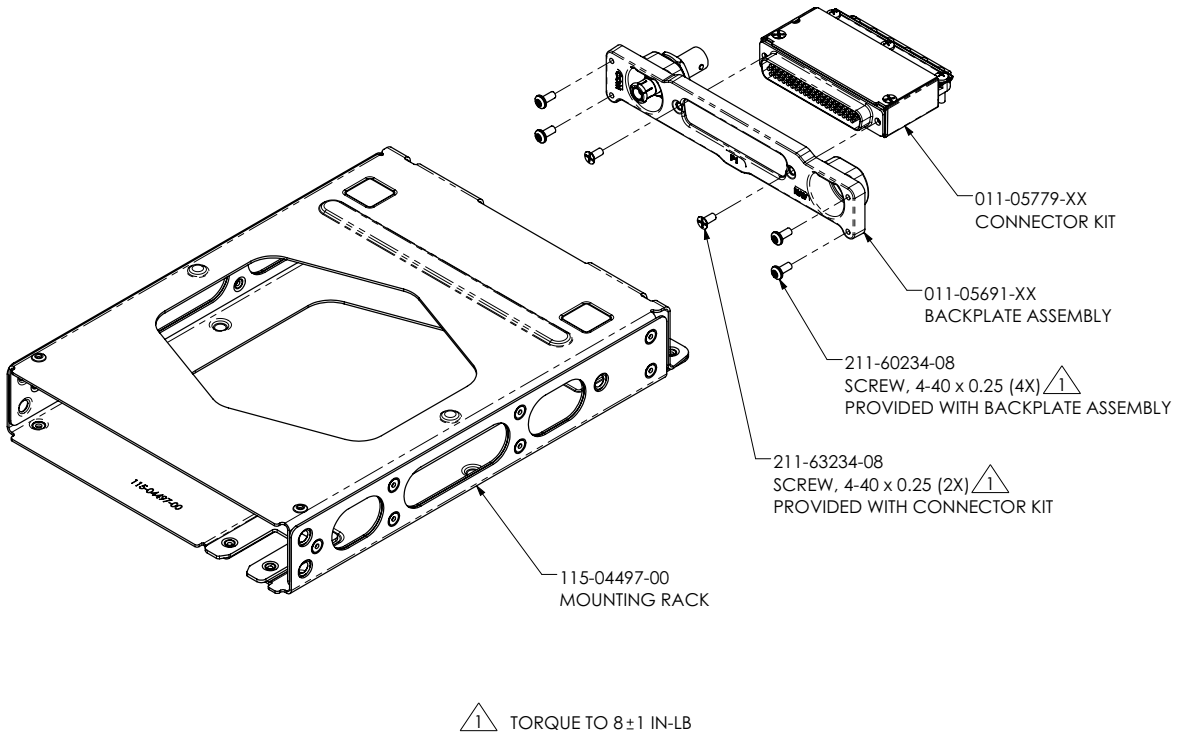

Figure 9-5 Mounting Rack Installation

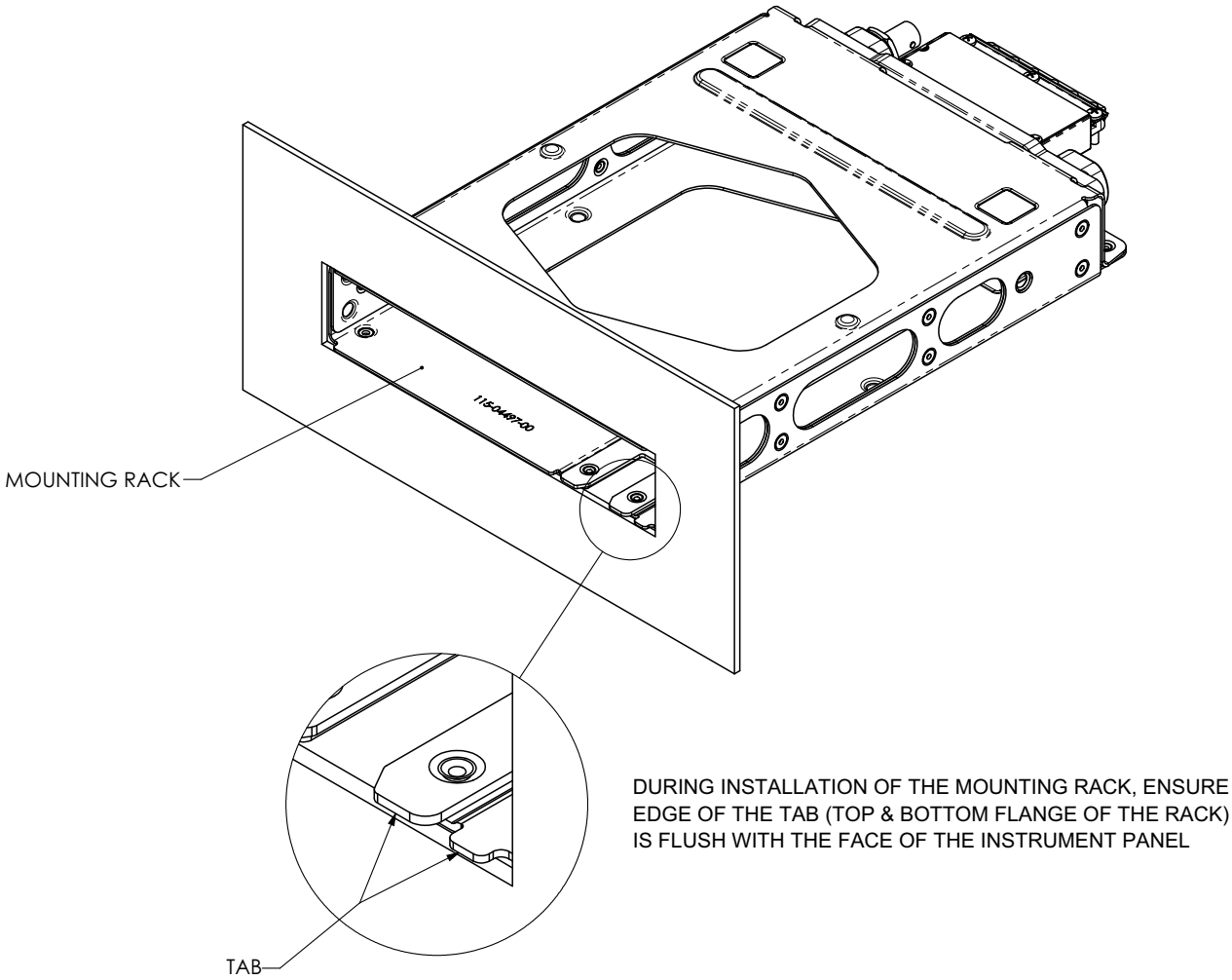

Figure 9-6 Mounting Rack

10 Interconnect Diagrams

Figure 10-1 GTR 205x Typical Installation 10-3
Figure 10-2 GTR 205xR Typical Installation 10-4
Figure 10-3 GTR 205x/205xR MIC Headsets Interconnect 10-5
Figure 10-4 GTR 205x Dual COM Interconnect 10-6
Figure 10-5 Power Lighting Configuration Interconnect 10-7
Figure 10-6 GTR 205x GPS Interconnect 10-8
Figure 10-7 Audio Panel Interconnect 10-10
Figure 10-8 GTR 205x/GTR 205xR EFIS Interconnect 10-11

This section contains wiring interconnects and connection examples necessary for unit installation. Each figure contains notes that must be followed. General notes apply to all figures in this section. Refer to manufacturer's documentation for complete pinout and interconnect information.

General Notes

- Power and ground connections must use 20 AWG on 28V systems and 18 AWG on 14V systems. 22AWG may be used to splice into D-sub, and splices much be less than 3.0".
- Connect shield grounds to backshell at the unit. Shield leads must be less than 3.0". Connect all other shield grounds to aircraft ground with as short a conductor as practical.
- Connect all aircraft power pins when using a 14 V aircraft bus.
- Connect all aircraft power pins when using a 28 V aircraft bus.
- Connections marked with “x” OR “X” indicate that there is no recommended connection. Any available port or pin is acceptable.
- Refer to manufacturer’s documentation for complete pinout and interconnect information.
- Pinouts of other units shown for reference only.
- If a splice is necessary, it must be performed at the unit’s connector-end of the wire. Splice as shown:

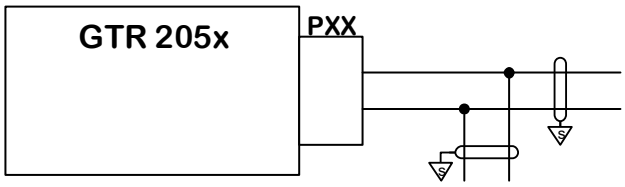

- Designations for ground connections:

  Shield Block Ground Airframe Ground

- ~ indicates any available similar functioning port or pin may be used. Ports or pins without ~ must be connected as shown.
- * indicates an active low pin.
- † indicates an active high pin.

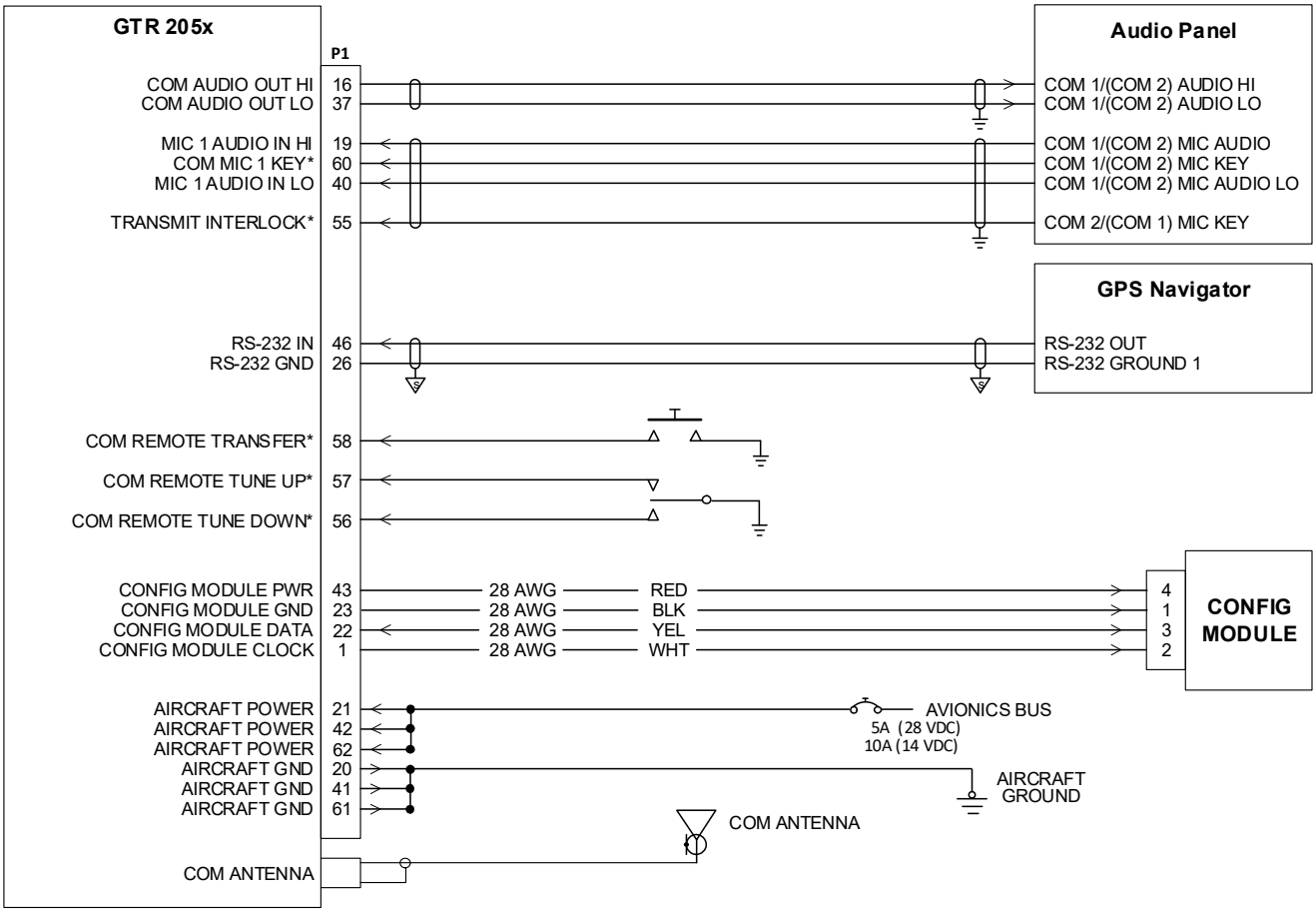

Figure 10-1 GTR 205x Typical Installation

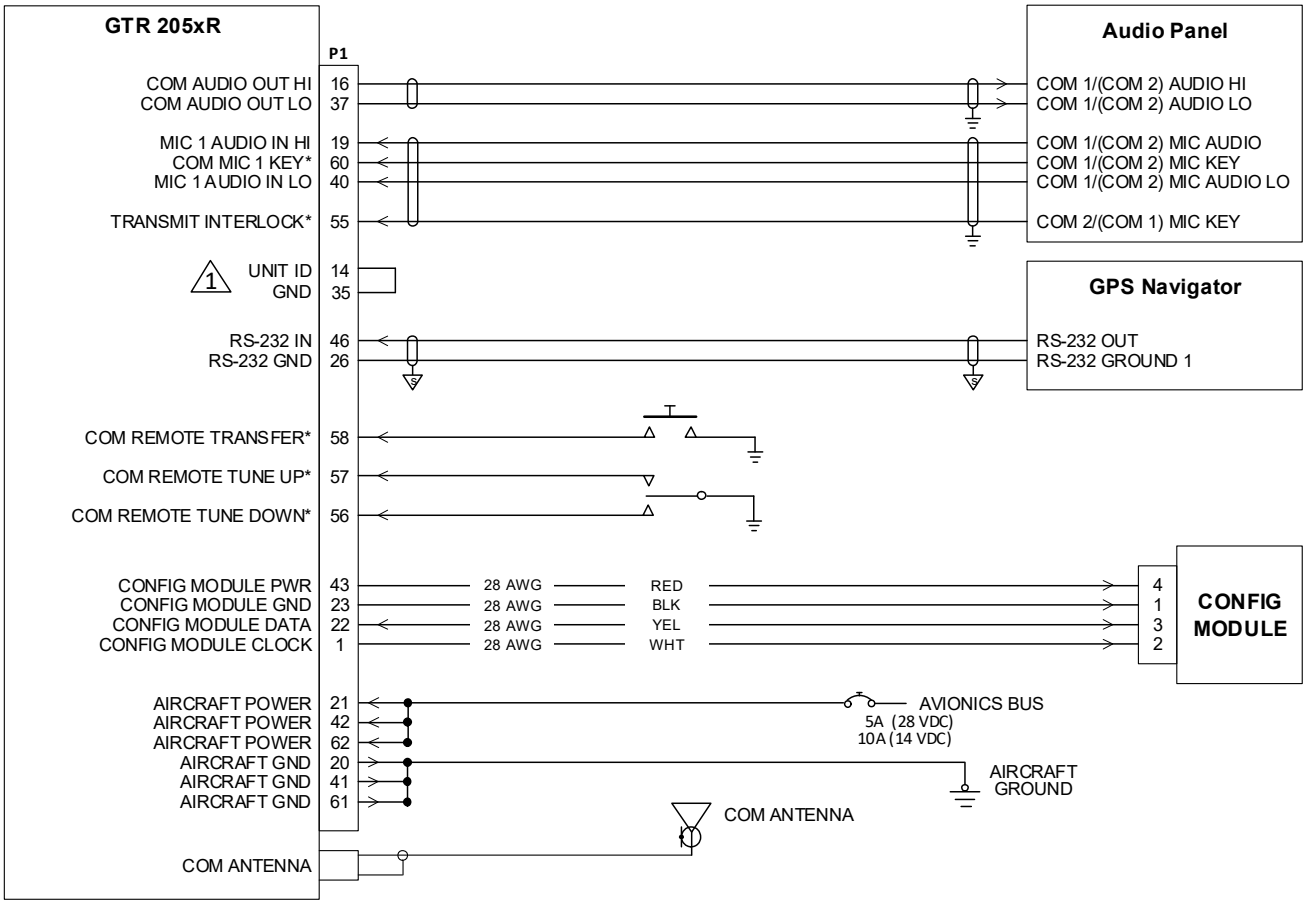

NOTES

1 WHEN PIN 14 IS OPEN THE UNIT IS SET AS COM 1. TO SET THE UNIT AS COM 2, GROUND THE PIN.

Figure 10-2 GTR 205xR Typical Installation

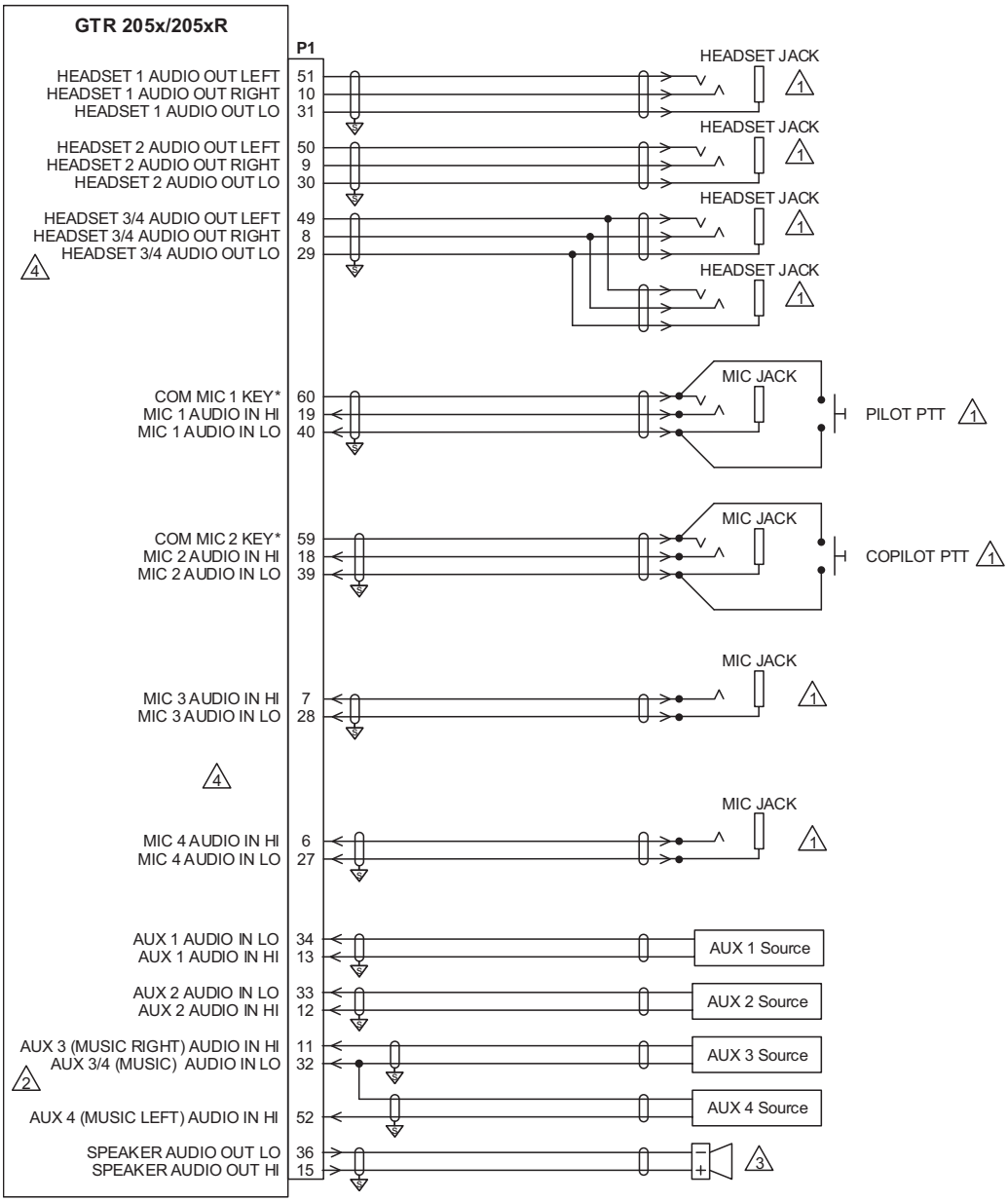

NOTES

1. ALL HEADSET AND MICROPHONE PLUGS MUST BE ELECTRICALLY ISOLATED FROM GROUND. THIS MAY REQUIRE THE USE OF INSULATING WASHERS WHEN MOUNTING THE PHONE PLUGS.

2. IF CONFIGURED FOR STEREO IN, AUX 3 WILL ACT AS STEREO LEFT, AND AUX 4 WILL ACT AS STEREO RIGHT.

3. DO NOT CONNECT THE SPEAKER GROUND RETURN TO THE AIRCRAFT CHASSIS. THE GROUND RETURN MUST GO TO THE GTR.

4. HEADSET 3/4, MIC 3, AND MIC 4 ARE ONLY AVAILABLE WITH THE AUDIO PANEL FEATURE ENABLEMENT, EXCLUSIVE TO GTR 205X.

Figure 10-3 GTR 205x/205xR MIC Headsets Interconnect

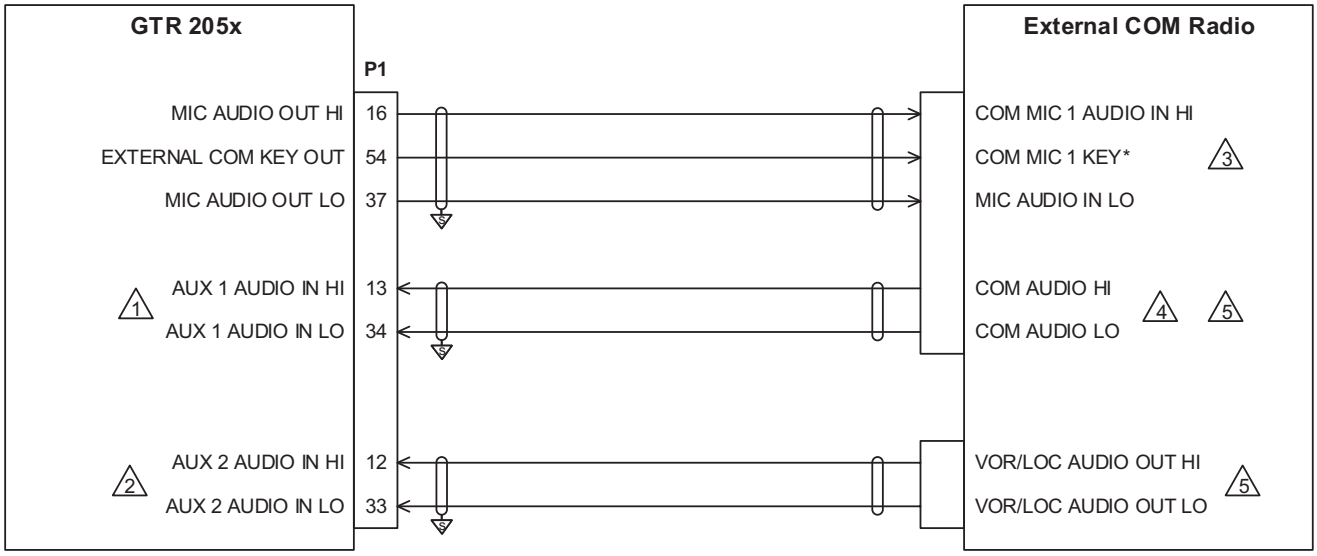

NOTES

1. CONFIGURE AUX 1 FOR “EXTERNAL COM” AND LABEL AS “COM [1/2].”
2. CONFIGURE AUX 2 FOR “PILOT CONTROL” AND LABEL AS “NAV 1.”
3. CONNECTING TWO MICROPHONES TO MIC AUDIO HI/LO AT THE SAME TIME MAY RESULT IN WEAK OR DISTORTED AUDIO. MIC ISOLATION RELAYS ARE RECOMMENDED SO ONLY ONE MIC IS ACTIVE AT A TIME.
4. THE 500 OHM AUDIO OUTPUTS ARE BALANCED OUTPUTS, AND THE LO OUTPUTS MUST BE CONNECTED.
5. SEE SECTION 5.2.14 FOR AUX INPUT COMPATABILITY.

Figure 10-4 GTR 205x Dual COM Interconnect

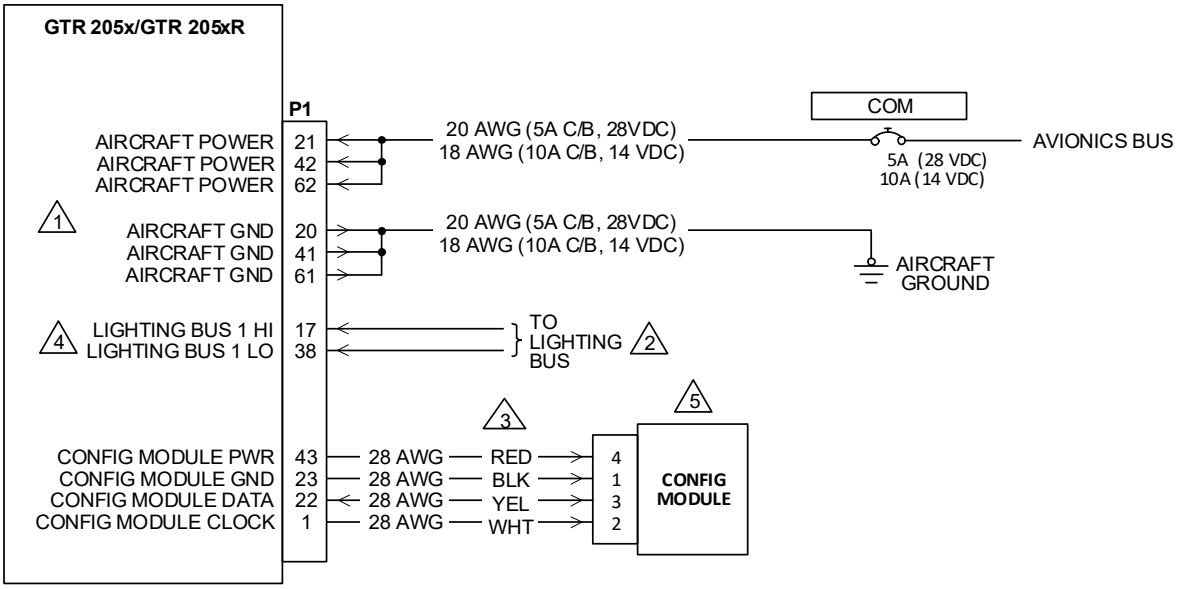

NOTES

1. ALL POWER LEADS AND GROUND LEADS ARE REQUIRED. 20 OR 22 AWG WIRE CAN BE USED FOR THE SPLICE. USE APPROPRIATE HEAT-SHRINK TUBING TO PROVIDE SUFFICIENT INSULATION FROM SURROUNDING CONTACTS.

2. OPTIONAL CONNECTION. LIGHTING CAN BE CONTROLLED BY THE INTEGRATED PHOTOCELL OR A SINGLE LIGHTING BUS.

3. THE SUPPLIED CONFIGURATION MODULE HARNESS USES 28 AWG WIRE. USE THE CONTACTS SUPPLIED WITH THE CONFIGURATION MODULE.

4. LIGHTING BUS NOT APPLICABLE TO THE GTR 205xR.

5. CONFIGURATION MODULE NOT APPLICABLE TO THE GTR 205xR.

Figure 10-5 Power Lighting Configuration Interconnect

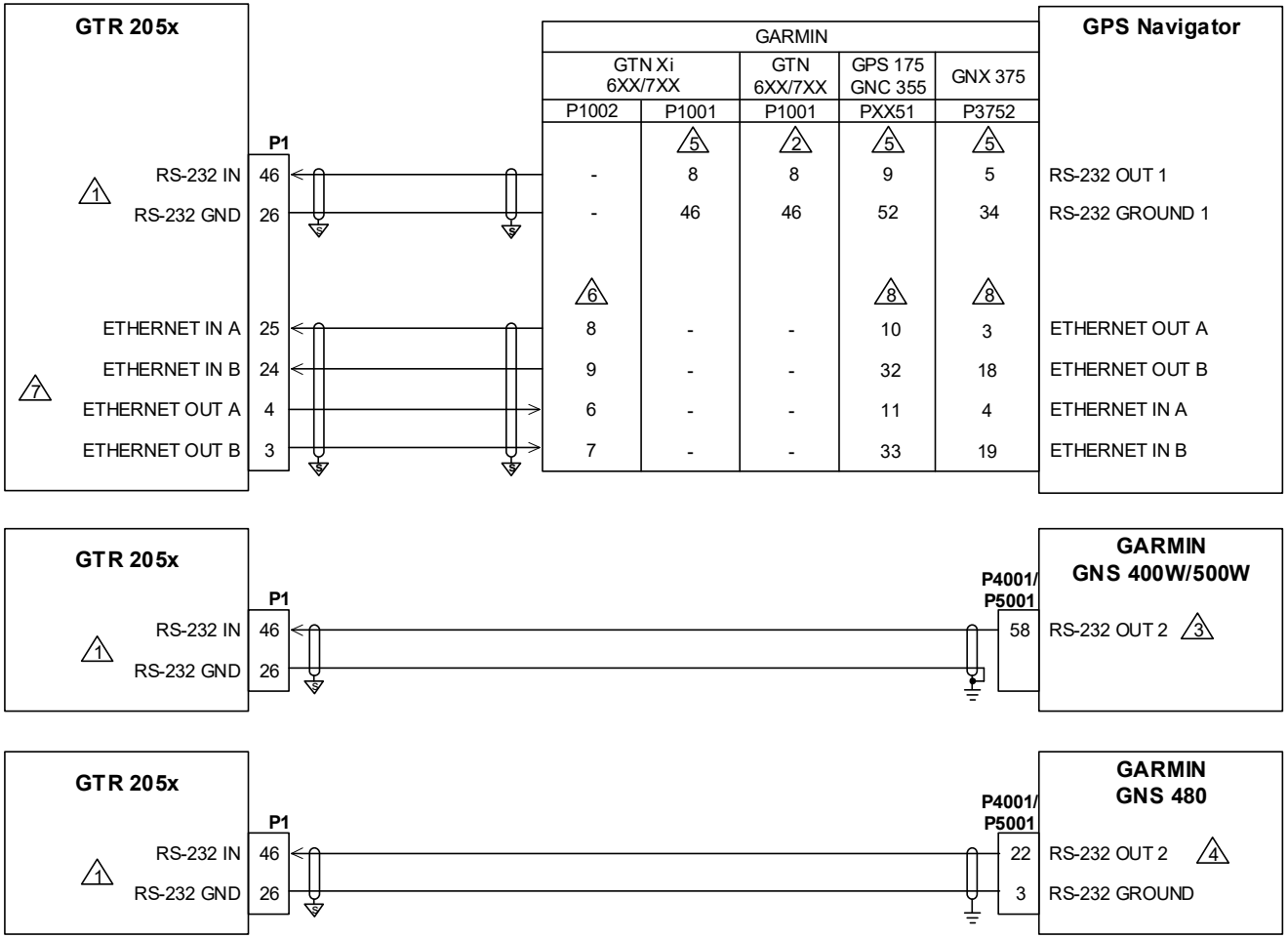

Figure 10-6 GTR 205x GPS Interconnect
Sheet 1 of 2

NOTES

1. CONFIGURE GTR SERIAL PORT FOR “AVIATION.”

2. CONFIGURE RS-232 OUTPUT TO “AVIATION FORMAT 1" FORMAT. ANY AVAILABLE RS-232 OUTPUT PORT MAY BE USED.

3. CONFIGURE RS-232 OUTPUT TO “AVIATION” FORMAT. ANY AVAILABLE RS-232 OUTPUT PORT MAY BE USED.

4. CONFIGURE RS-232 OUTPUT TO “MAPCOM” FORMAT. RS-232 OUTPUT PORT 1 OR PORT 5 MAY BE USED.

5. CONFIGURE RS-232 OUTPUT TO “AVIATION OUTPUT 1" FORMAT. ANY AVAILABLE RS-232 OUTPUT PORT MAY BE USED.

6. USE EITHER HSDB (ETHERNET) OR RS-232, NOT BOTH. HSDB (ETHERNET) IS THE PREFERRED CONNECTION. HSDB (ETHERNET) PORT 1 SHOWN. ANY AVAILABLE HSDB (ETHERNET) PORT MAY BE USED.

7. CONFIGURE GTR GPS NAVIGATOR STATUS TO “PRESENT.”

8. USE EITHER HSDB (ETHERNET) OR RS-232, NOT BOTH. HSDB (ETHERNET) IS THE PREFERRED CONNECTION.

Figure 10-6 GTR 205x GPS Interconnect
Sheet 2 of 2

GTR 205x/GTR 205xR	P1	BENDIX/KING				GARMIN				PS ENGINEERING		AUDIO PANEL
		KMA 24	KMA 26	KMA 28	KMA 24H -70/-71	SL 10 SERIES SL 15 SERIES	GMA 245	GMA 340 GMA 35/350	GMA 347	PMA 8000	PMA 6000 PMA 7000	2
		P241	P261	J1 (BOTTOM)	P241	BOTTOM	J2401	J1/3501	J3471	J1 (BOTTOM)	BOTTOM	
1 COM AUDIO OUT HI	16	9/(10)	4/(5)	9/(10)	T/(16)	9/(10)	9/(13)	9/(13)	7/(12)	9/(13)	9/(10)	COM1/(COM2) AUDIO HI
COM AUDIO OUT LO	37	GND LUG	21/(22)	GND LUG	GND LUG	GND LUG	10/(14)	10/(14)	8/(13)	10/(14)	GND LUG	COM1/(COM2) AUDIO LO
3 MIC 1 AUDIO IN HI	19	P/(H)	37/(39)	P/(H)	3/(E)	P/(H)	11/(15)	11/(15)	26/(32)	11/(15)	P/(H)	COM1/(COM2) MIC AUDIO
COM MIC 1 KEY*	60	R/(V)	38/(40)	R/(V)	C/(H)	R/(V)	12/(30)	12/(30)	27/(33)	12/(30)	R/(V)	COM1/(COM2) MIC KEY
MIC 1 AUDIO IN LO	40	GND LUG	GND LUG	GND LUG	GND LUG	GND LUG	10/(14)	10/(14)	8/(13)	GND LUG	GND LUG	COM1/(COM2) MIC AUDIO LO
							6	6	6			
5 TRANSMIT INTERLOCK*	55	V/(R)	40/(38)	V/(R)	H/(C)	V/(R)	30/(12)	30/(12)	33/(27)	30/(12)	V/(R)	COM2/(COM1) MIC KEY

NOTES

1. THE AUDIO OUTPUTS ARE BALANCED OUTPUTS, AND THE LO OUTPUTS NEED TO BE CONNECTED. IF THE AUDIO PANEL DOES NOT HAVE A LO INPUT, THE LO OUTPUT SHOULD BE CONNECTED TO A GROUND LUG AT THE AUDIO PANEL.

2. REFER TO MANUFACTURER'S DOCUMENTATION FOR COMPLETE PINOUT AND INTERCONNECT INFORMATION. PINOUTS OF OTHER UNITS SHOWN FOR REFERENCE ONLY.

3. CONNECTING TWO MICROPHONES TO MIC AUDIO HI/LO AT THE SAME TIME MAY RESULT IN WEAK OR DISTORTED AUDIO. MIC ISOLATION RELAYS ARE RECOMMENDED SO THAT ONLY ONE MIC IS ACTIVE AT A TIME.

4. SHIELDS FOR AUDIO CABLES SHOULD BE GROUNDED AT ONE END (WITH LEADS LESS THAN 3.0") AND LEFT FLOATING AT THE OTHER END. IF SHIELDED AUDIO CABLE IS CARRIED THROUGH A DISCONNECT, CARRY THE SHIELD GROUND THROUGH THE DISCONNECT ON A SEPARATE PIN.

5. CONFIGURABLE DISCRETE INPUT 4 SHOWN. ANY AVAILABLE CONFIGURABLE DISCRETE INPUT MAY BE USED.

6. SPLICE COM AUDIO LO AND MIC AUDIO IN LO TOGETHER INTO THE SAME PIN ON AUDIO PANEL.

Figure 10-7 Audio Panel Interconnect

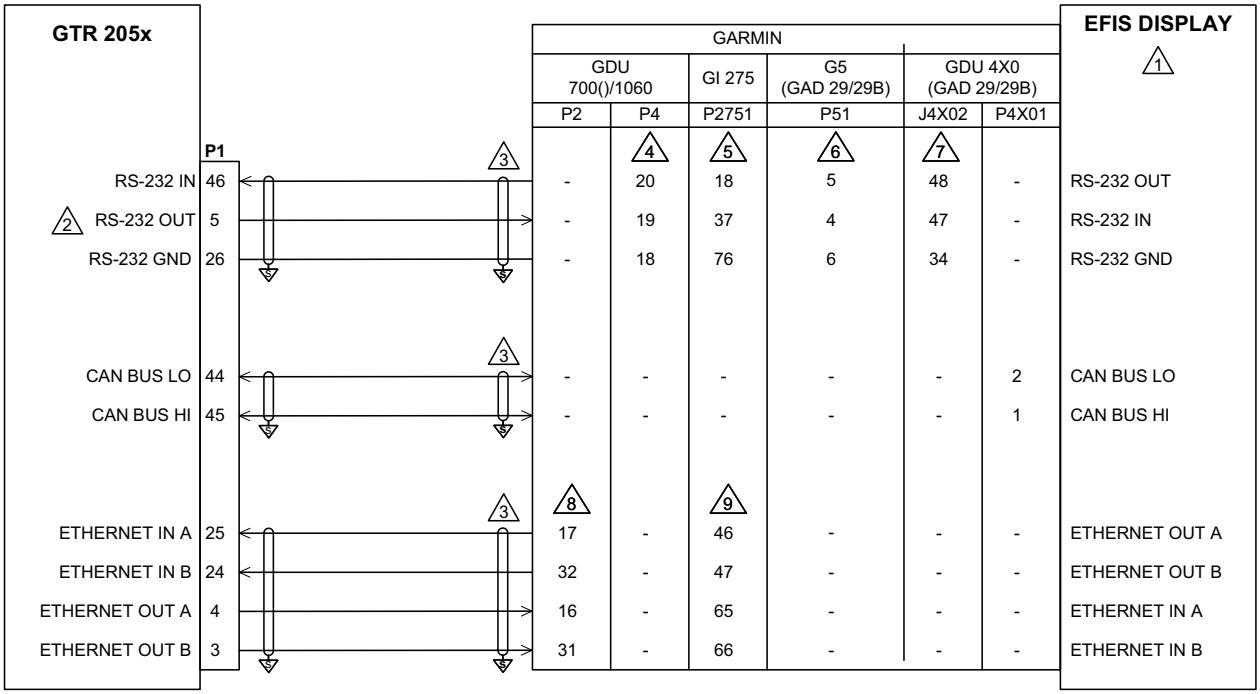

NOTES

1. REFER TO INSTALLATION DOCUMENTATION FOR COMPLETE PINOUT AND INTERCONNECT INFORMATION FOR INTERFACING EQUIPMENT.

2. CONFIGURE GTR SERIAL PORT FOR “NMEA 1.”

3. USE ONLY CAN OR RS-232 OR HSDB (ETHERNET), NOT MORE THAN ONE. HSDB (ETHERNET) IS THE PREFERRED CONNECTION. IF NOT CONNECTED FOR HSDB (ETHERNET), CAN IS THE PREFERRED CONNECTION.

Figure 10-8 GTR 205x/GTR 205xR EFIS Interconnect
Sheet 1 of 2

NOTES

4 RS-232 PORT 5 FOR GDU 700()/1060/1210 SHOWN. ANY AVAILABLE RS-232 PORT MAY BE USED.

5 RS-232 PORT 2 FOR GI 275 SHOWN. ANY AVAILABLE RS-232 PORT MAY BE USED.

6 CONFIGURE RS-232 INPUT AND OUTPUT FORMAT TO “GARMIN VHF NAV RADIO.”

7 RS-232 PORT 1 FOR GDU 4X0 SHOWN. ANY AVAILABLE PORT MAY BE USED. THE #1 NAV/COM MUST BE ON A LOWER NUMBERED RS-232 PORT ON THE GDU. CONFIGURE RS-232 PORT FOR “GARMIN VHF NAV/COM.”

8 HSDB (ETHERNET) PORT 1 FOR GDU 700()/1060/1210 SHOWN. ANY AVAILABLE HSDB (ETHERNET) PORT MAY BE USED. CONFIGURE GNC GDU (TXi) STATUS TO “PRESENT.”

9 HSDB (ETHERNET) PORT 1 FOR GI 275 SHOWN. ANY AVAILABLE HSDB (ETHERNET) PORT MAY BE USED. CONFIGURE GNC GI 275 STATUS TO “PRESENT.”

Figure 10-8 GTR 205x/GTR 205xR EFIS Interconnect
Sheet 2 of 2

GARMIN®